1.0A SURFACE MOUNT GLASS PASSIVATED BRIDGE

RECTIFIER Reverse Voltage - 100 to 1000 V

Forward Current 1.0A

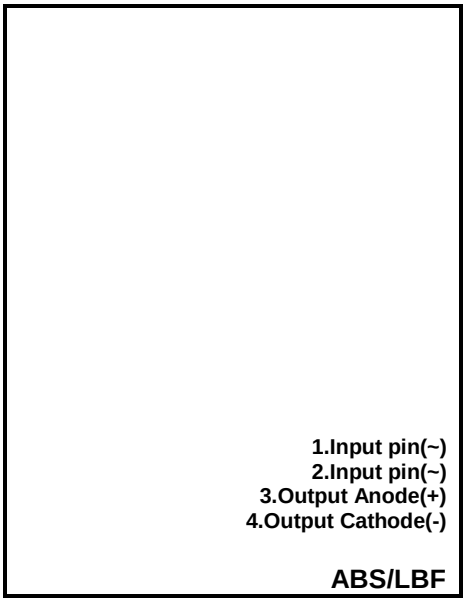

FEATURES

- Fast reverse recovery time
- Designed for Surface Mount Application
- Glass Passivated Chip Junction
- Low power loss, high efficiency
- Lead free in comply with EU RoHS 2011/65/EU directives

MECHANICAL DATA

- Case: ABS/LBF
- Terminals: Solderable per MIL-STD-750, Method 2026
- Approx. Weight: 88mg / 0.0031oz

Maximum Ratings and Electrical characteristics

Ratings at 25 °C ambient temperature unless otherwise specified.

Single phase half-wave 60 Hz, resistive or inductive load, for capacitive load current derate by 20 %.

Parameter	Symbols	UABS1	UABS2	UABS4	UABS6	UABS8	UABS10	Units
Maximum Repetitive Peak Reverse Voltage	V_{RRM}	100	200	400	600	800	1000	V
Maximum RMS voltage	V_{RMS}	70	140	280	420	560	700	V
Maximum DC Blocking Voltage	V_{DC}	100	200	400	600	800	1000	V
Average Rectified Output Current at T_c = 125 °C	I_o	1.0						A
Peak Forward Surge Current 8.3 ms Single Half Sine-Wave Superimposed on Rated Load(JEDEC method)	I_{FSM}	35						A

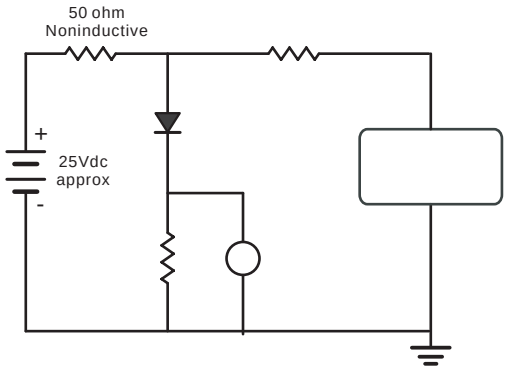
50 ohm
Noninductive
+
25Vdc
approx
-