15A GLASS PASSIVATED BRIDGE RECTIFIER Reverse

Voltage - 100 to 1000 V

Forward Current – 15A

FEATURES

- Surge overload rating-220 amperes peak
- Polarity:As marked on body
- Ideal for printed circuit board
- Plastic material has U/L
  The flammability classification 94V-0
-

FIG. 1- DERATING CURVE OUTPUT RECTIFIED CURRENT

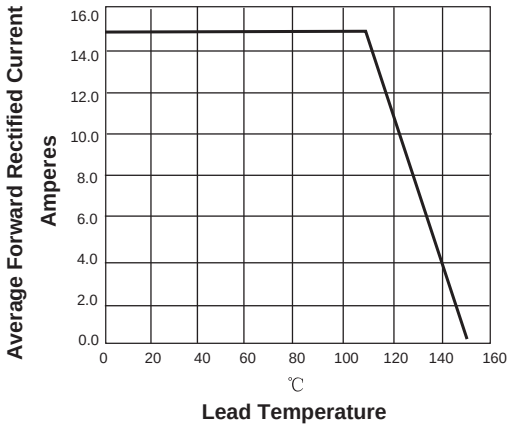

FIG. 2-MAXIMUM NON-REPETITIVE PEAK FORWARD SURGE CURRENT PERLEG

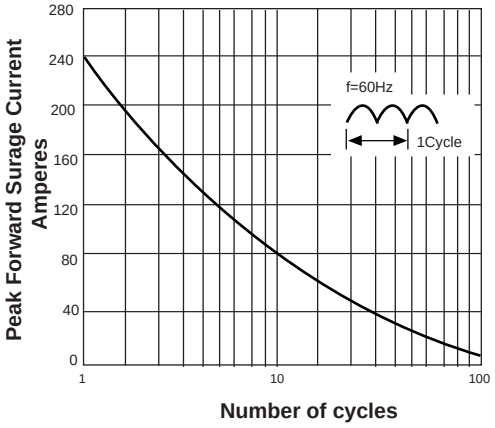

FIG. 3-TYPICAL FORWARD VOLTAGE CHARACTERISTICS

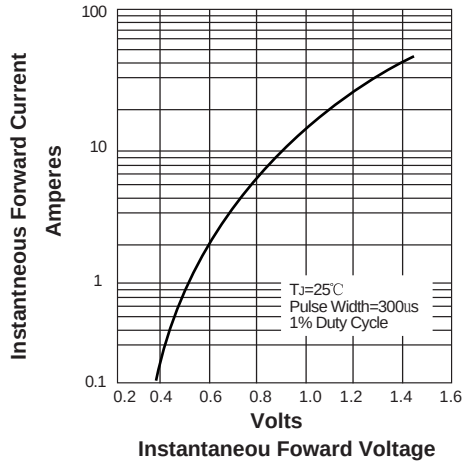

FIG. 4-TYPICAL REVERSE LEAKAGE CHARACTERISTICS

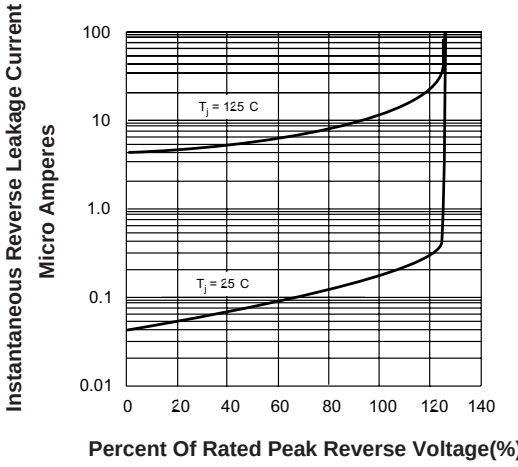

Marking Diagram

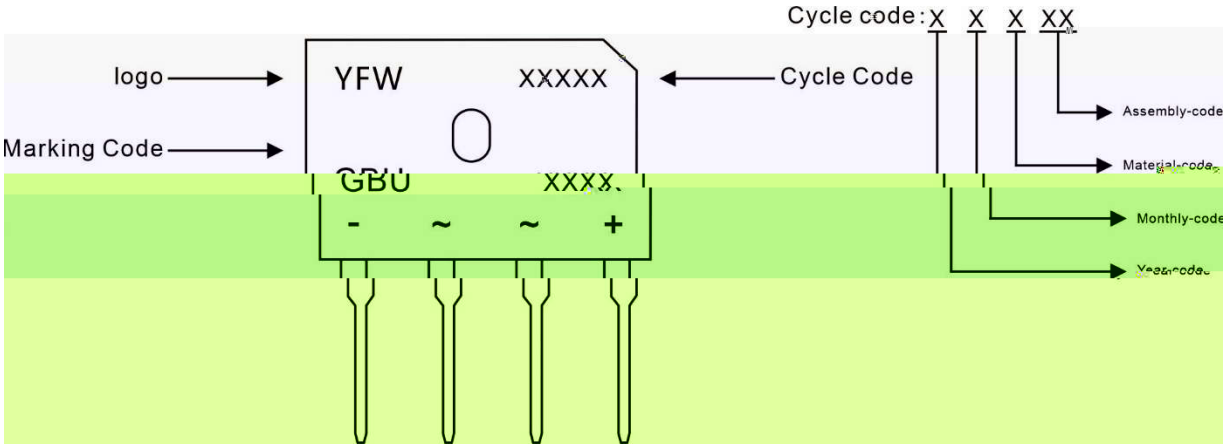

Ordering information

Package	Packing Description	Packing Quantity
GBU	bulk	500PCS/Box 5000PCS/Carton

Package Dimensions

GBU

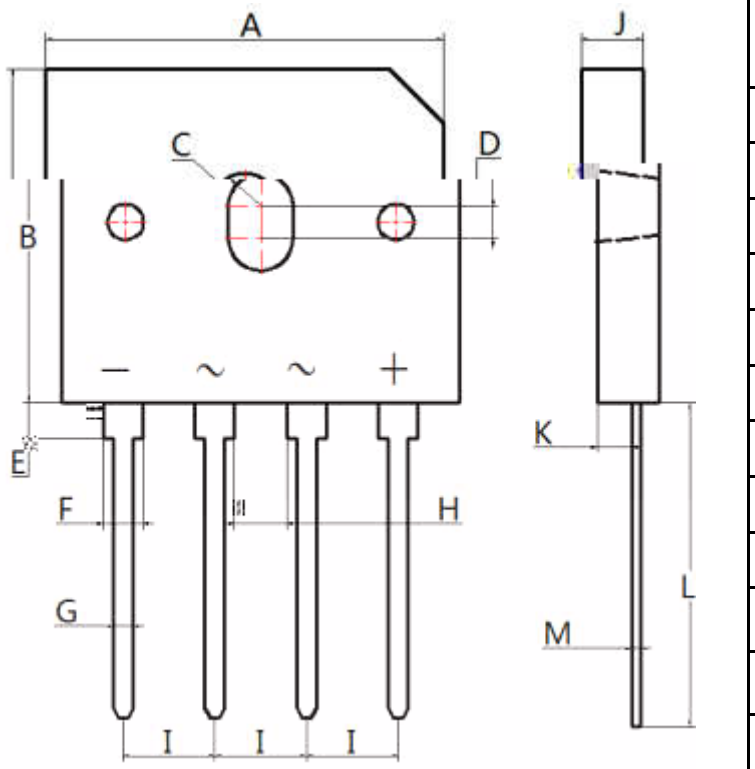

Dim.	Millimeter(mm)		Dimensions inInch	
	Min.	Max.	Min.	Max.
A	21.70	22.30	0.86	0.88
B	18.20	18.80	0.72	0.74
C	1.60	2.00	0.06	0.08
D	1.60	2.00	0.06	0.08
E	1.80	2.20	0.07	0.09
F	2.00	2.40	0.08	0.09
G	0.90	1.30	0.04	0.05
H	3.00	/	0.12	/
I	4.88	5.28	0.19	0.21
J	3.20	3.60	0.13	0.14
K	1.70	2.10	0.07	0.08
L	17.50	18.50	0.69	0.73
M	0.40	0.60	0.02	0.02

The information presented in this document is for reference only. GuangDong Youfeng Microelectronics Co.,Ltd. reserves the right to make changes without notice for the specification of the products displayed herein to improve reliability, function or design or otherwise. The product listed herein is designed to be used with ordinary electronic equipment or devices, and not designed to be used with equipment or devices which require high level of reliability and the malfunction of with would directly endanger human life (such as medical instruments, transportation equipment, aerospace machinery, nuclear-reactor controllers, fuel controllers and other safety devices),YFW or anyone on its behalf, assumes no responsibility or liability for any damages resulting from such improper use of sale. This publication supersedes & replaces all information previously supplied. For additional information, please visit our website https://www.yfwdiode.com, or consult YFW sales office for further assistance.