Super Fast Rectifiers

Reverse Voltage - 600V

Forward Current - 20A

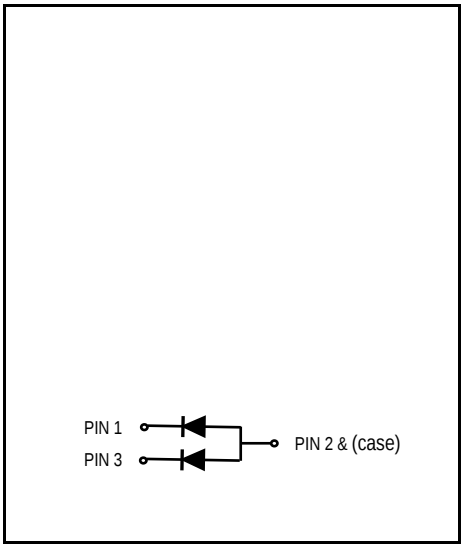

FEATURES

- Glass passivated chip junctions
- Super fast recovery time for switching mode application
- High Forward Surge Capability
- Low Reverse Current
- Lead free in compliance with EU RoHS 2011/65/EU directive

MECHANICAL DATA

- Circuit figure: Common
- Leads: Solderable per mil-std-202, Method 208
- Polarity:as marked
- Mounting torque:5 in-lbs maximum
- Terminals:Puretin plated

MAXIMUM RATINGS AND ELECTRICAL CHARACTERISTICS (TA=25℃)

Maximum repetitive reverse voltage	V_{RRM}	600	V
Maximum RMS voltage	V_{RMS}	420	V
Maximum DC blocking voltage	V_{DC}	600	V
Maximum average forward current	I_{AV}	20	A
Peak forward surge current,8.3ms single half sine-wave superimposed on rated load	I_{FSM}	300	A
Typical thermal resistance per diode(Note 1)	$R_{\theta-JC}$	2.5	℃/W
Operation Junction Temperature and Storage Temperature	T_J，T_{STG}	-55 ~ +150	℃

CHARACTERISTIC	IO
	65

Ratings And Characteristic Curves

EHF- 0 , SXOHB@K ENQV@QC BTQQDMS CDQ@SHMF BTQUD

/ 1/ 3/ 5/ 7/ 0// 01/ 03/ 05/ 07/

B@RD SDLODQ@STQD+ ' B (

EHF- 2 , L@WHLTL MNM,QDODSHSHUD ENQV@QC RTQFD BTQQDMS

OD@J ENQV@QC RTQFD BTQQDMS+ '@(

4//

3//

2//

1//

0//

/

MTLADQ NE BXBKDR @S 5/Gy

EHF- 3 , SXOHB@K QDUDQRD BG@Q@BSDQHRSHBR

HMRS@MS@MDNTR QDUDQRD BTQQDMS+ 't@(

ODQBDMS NE Q@SDC OD@J QDUDQRD UNKS@FD+ '$(

EHF- 1 , SXOHB@K HMRS@MS@MDNTR ENQV@QC BG@Q@BSDQHRSHBR

HMRS@MS@MDNTR ENQV@QC BTQQDMS+ '@(

HMRS@MS@MDNTR ENQV@QC UNKS@FD+ 'U(

EHF-5, SDRS BHQBTHS CH@FQ@L @MC QDUDQRD QDBNUDQX SHLD BG@Q@BSDQHRSHBR

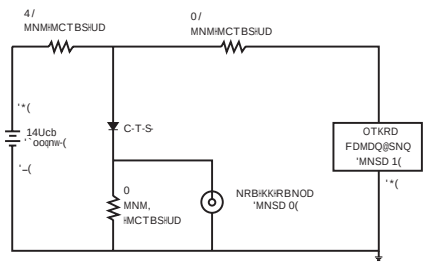

MNSDR9 0- Qhrd Shld< 6mr l `w-+ Hmots H lodc`mbd< 0 ldfng l -11oE-
1- Qhrd Shld< 0/mr l `w-+ Rntqbd H lodc`mbd< 4/ ng l r-

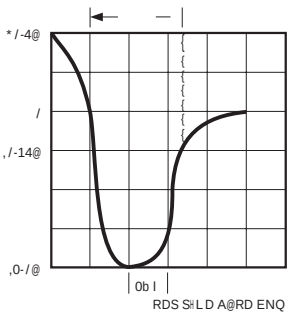

RDS SHLD A@RD ENQ
4/ . 0/mr . b l

'N

MUR2060DTR	! ! " # $ %	" & " ' ( ) * + & , - . / % %	0 " 1 2 3 4 5 6 7 8 % %	+ " " " 9 : ; 4 $ (< % 0 " " " 9 : ; 4 : = > 5 (? %