					±	

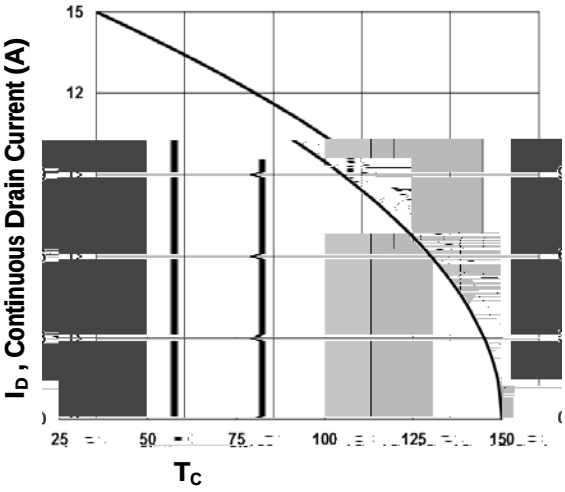

15
12
I_D , Continuous Drain Current (A)
25
50
75
100
125
150
T_C

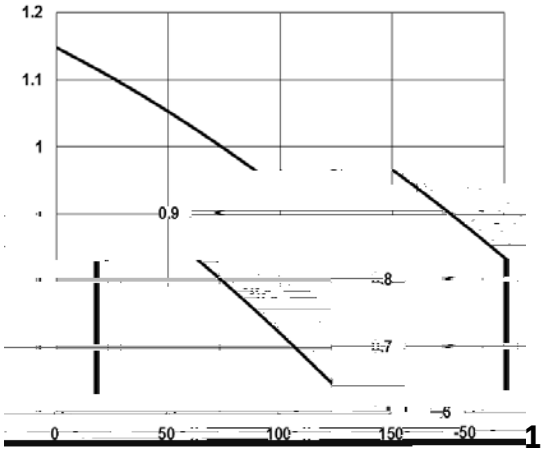

1.2
1.1
1
0.9
0
50
100
150

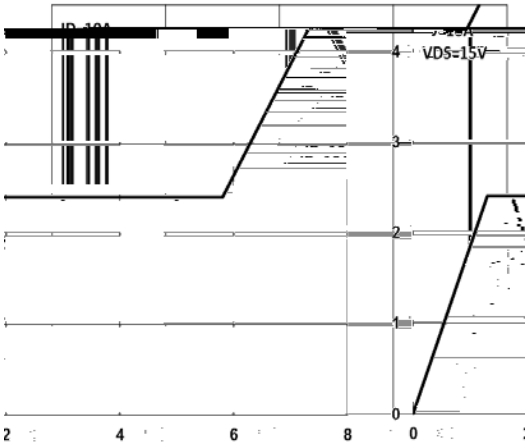

VDS=15V
4
3
2
1
0
2
4
6
8
0

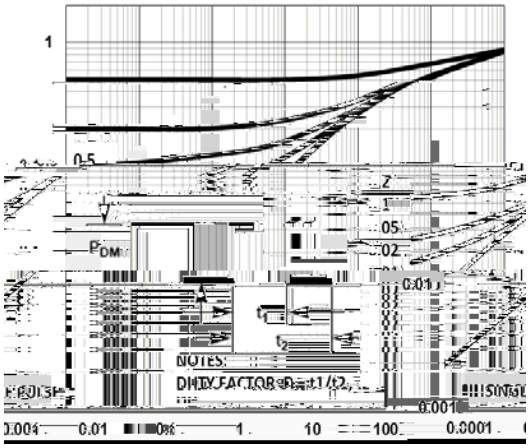

1
0.5
P_{DM}
NOTES:
DUTY FACTOR D=t1/t2
0.01
10
100
0.0001

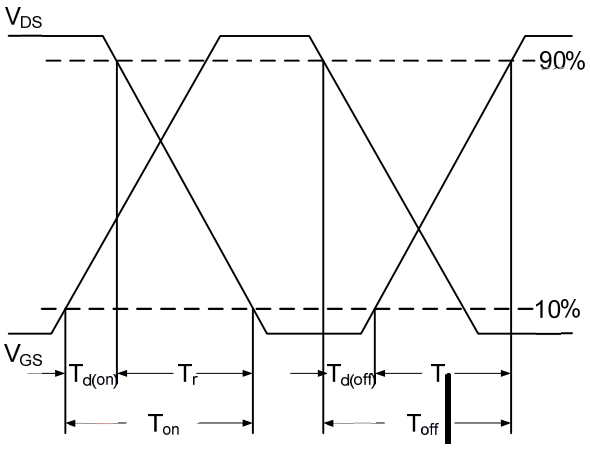
VDS
90%
10%
VGS
Td(on)
Tr
Td(off)
Tf
Ton
Toff

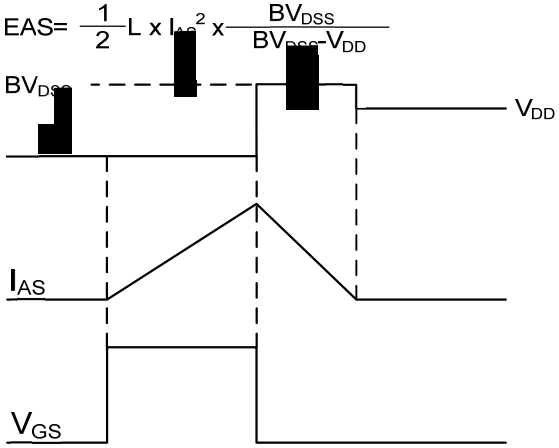
EAS= 1/2 L x IAS2 x BVDSS / (BVDSS-VDD)
BVDSS
VDD
IAS
VGS

Marking Diagram

Ordering information

Package	Packing Description	Packing Quantity
SOP-8	Tape/Reel,13”reel	3000PCS/Reel 30000PCS/Carton

Package Dimensions

SOP-8

Dim	Millimeter		Inches	
	Min.	Max.	Min.	Max.
A	1.35	1.75	0.053	0.069
A1	0.10	0.25	0.004	0.010
A2	1.35	1.50	0.053	0.059
b	0.35	0.55	0.014	0.022
c	0.15	0.25	0.006	0.010
D	4.80	5.00	0.189	0.197
D1	3.10	3.50	0.122	0.138
[redacted]	[redacted]30	6.20	0.228	0.244
E1	3.80	4.00	0.150	0.157
E2	2.20	2.60	0.087	0.102
e	1.27 (BSC)		0.050 (BSC)	
L	0.40	1.27	0.016	0.050

The information presented in this document is for reference only. GuangDong Youfeng Microelectronics Co.,Ltd. reserves the right to make changes without notice for the specification of the products displayed herein to improve reliability, function or design or otherwise. The product listed herein is designed to be used with ordinary electronic equipment or devices, and not designed to be used with equipment or devices which