Marking Diagram

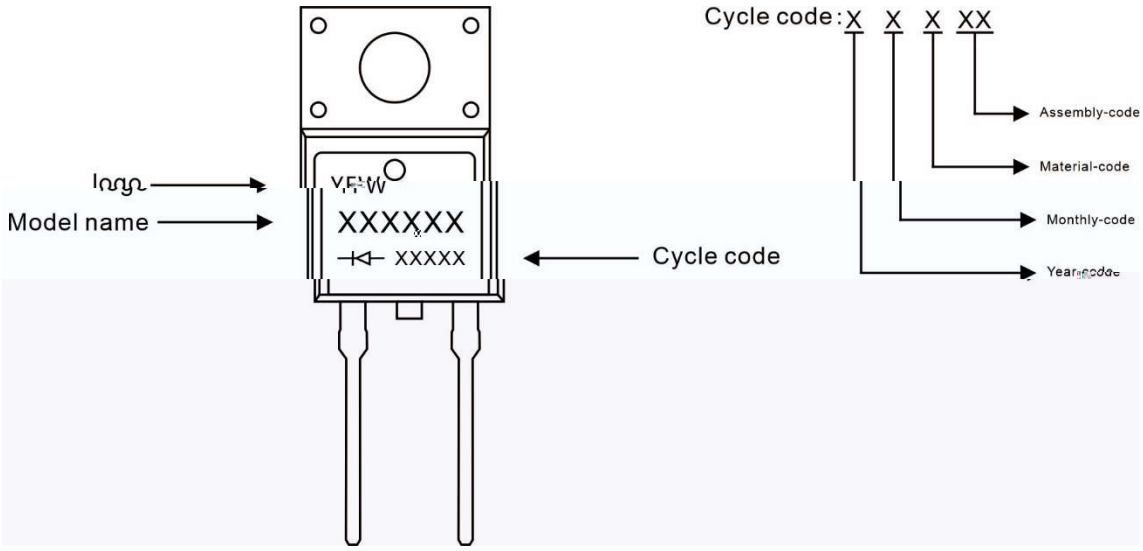

Ordering information

Model name	Package	Unit Weight	Base Quantity	Packing Quantity
YFWD306065FAC	TO-220FAC	0.06oz(1.7g)	50pcs/tube	1000PCS/Box 5000PCS/Carton

Package Dimensions

TO-220FAC

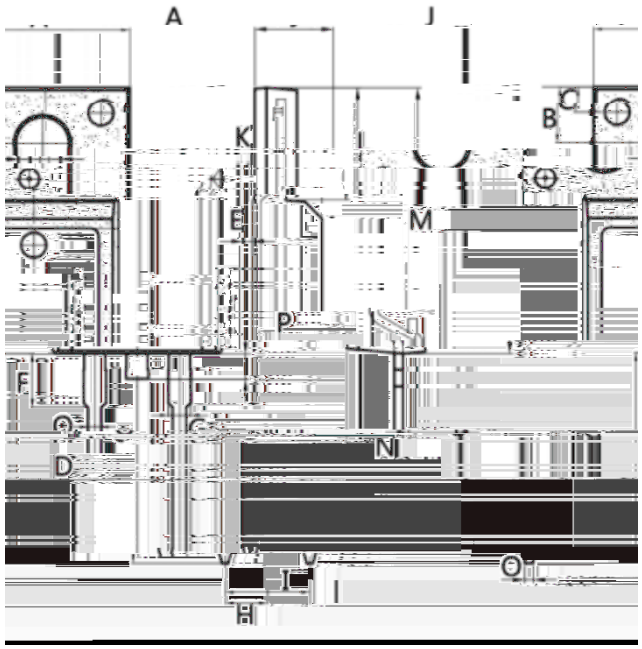

Symbol	Millimeter		Inches	
	Min.	Max.	Min.	Max.
A	9.95	10.25	0.392	0.404
B	2.95	3.25	0.116	0.128
C	1.25	1.45	0.049	0.057
E	12.95	13.25	0.51	0.52
F	0.40	0.60	0.016	0.024
G	1.30	1.45	0.051	0.057
H	TYP2.54		TYP 0.1	
I	TYP5.08		TYP 0.2	
J	4.60	4.75	0.181	0.187
K	2.45	2.65	0.097	0.104
L	6.5	6.8	0.256	0.268
M	15.4	16.0	0.606	0.630
N	2.75	3.05	0.108	0.120
O	0.45	0.55	0.018	0.022
P	0.6	0.8	0.024	0.032
Q	0.76	0.84	0.030	0.033

The information presented in this document is for reference only. GuangDong Youfeng Microelectronics Co.,Ltd. reserves the right to make changes without notice for the specification of the products displayed herein to improve reliability, function or design or otherwise. The product listed herein is designed to be used with ordinary electronic equipment or devices, and not designed to be used with equipment or devices which require high level of reliability and the malfunction of with would directly endanger human life (such as medical instruments, transportation equipment, aerospace machinery, nuclear-reactor controllers, fuel controllers and other safety devices),YFW or anyone on its behalf, assumes no responsibility or liability for any damages resulting from such improper use of sale. This publication supersedes & replaces all information previously supplied. For additional information, please visit our website https://www.yfwdiode.com, or consult YFW sales office for further assistance.