Drain-Source Breakdown Voltage	V_{GS}=0V , $I_{D=-}$250uA		-100			
Zero Gate Voltage Drain Current	V_{DS}=-80V , V_{GS}=0V				-1.0	
Gate-Body Leakage Current	V_{GS}= Ñ20V , V_{DS}=0V				Ñ100	
Gate Threshold Voltage	V_{DS} = VGS, I_D=-250uA		-1.0	-1.8	-2.5	
Drain-Source On-State Resistance	V_{GS} =-10V , I_D =-8A			90	110	
	V_{GS} =-4.5V , I_D =-6A			105	131	
Forward Transconductance	V_{DS} =10V , I_D =-4A			6.6		
Input Capacitance	V_{DS} =-30V V_{GS} =0 V f =1.0MHz			2362		
Output Capacitance				170		
Reverse Transfer Capacitance				113		
Total Gate Charge	V_{DS}=-30V,I_D=-8A,V_{GS}=-10V			25.9		
Gate-Source Charge	V_{DS} =-30V I_D =-8A V_{GS} =-10V			6.6		
Gate-Drain Charge				7.8		
Turn-On Delay Time	V_{DD}=-30V I_D =-8A V_{GS}=-10V R_{GEN} =6q			23		
Rise Time				44		
Turn-Off Delay Time				86		
Fall Time				20		
Diode Forward Voltage	V_{GS}=0V , I_S=-2A			-0.75	-1.3	

Figure 1. Output Characteristics

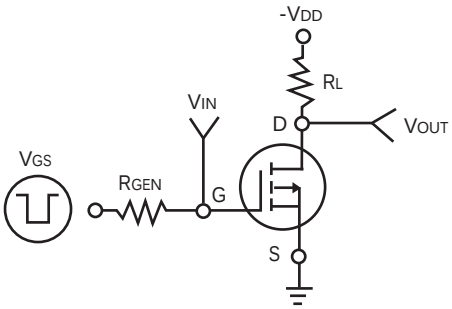

Figure 10a. Switching Test Circuit

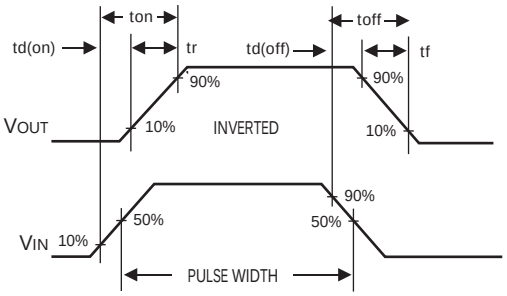

Figure 10b. Switching Waveforms

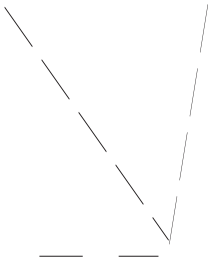

Marking Diagram

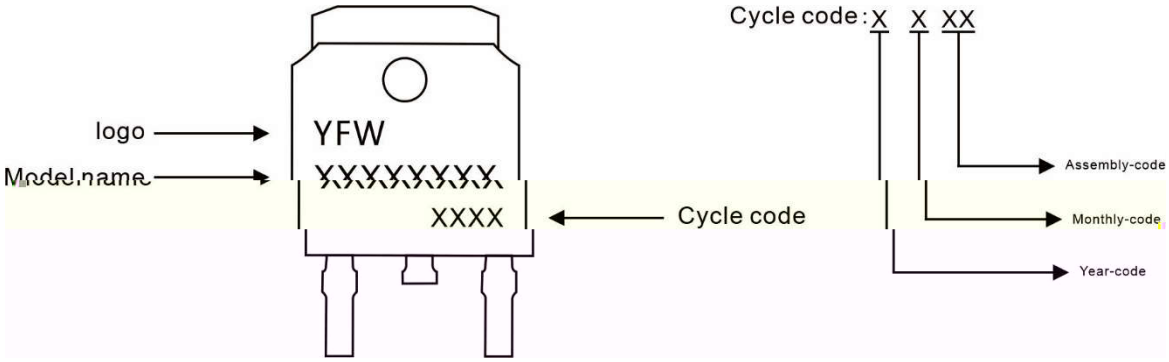

Ordering information

Model name	Package	Unit Weight	Base Quantity	Packing Quantity
YFW20P10AD	TO-252	0.011oz(0.32g)	2500pcs/reel	5000pcs/box 25000pcs/Carton

Package Dimensions

TO-252

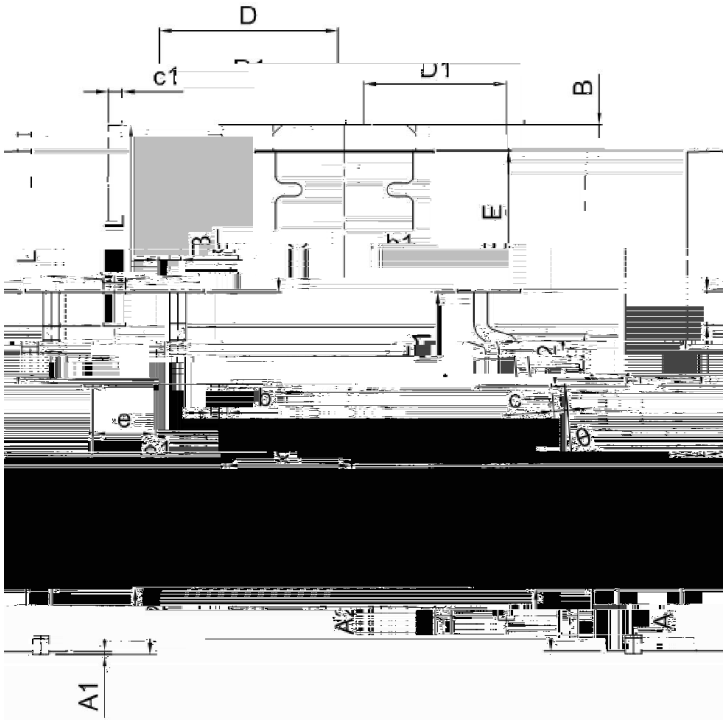

Dim	Millimeter		Inches	
	Min.	Max.	Min.	Max.
A	2.20	2.50	0.087	0.098
A1	0.00	0.12	0.000	0.005
A2	2.20	2.40	0.087	0.094
B	1.20	1.60	0.047	0.063
b	0.50	0.70	0.020	0.028
b1	0.70	0.90	0.028	0.035
c	0.40	0.60	0.016	0.024
c1	0.40	0.60	0.016	0.024
D	6.35	6.65	0.250	0.262
D1	5.20	5.40	0.205	0.213
E	5.40	5.70	0.213	0.224
e	2.20	2.40	0.087	0.094
e1	4.40	4.80	0.173	0.189
L	10.00	11.00	0.393	0.433
L1	2.70	3.10	0.106	0.122
L2	1.40	1.80	0.055	0.071
L3	0.90	1.50	0.035	0.059

The information presented in this document is for reference only. GuangDong Youfeng Microelectronics Co.,Ltd. reserves the right to make changes without notice for the specification of the products displayed herein to improve reliability, function or design or otherwise. The product listed herein is designed to be used with ordinary electronic equipment or devices, and not designed to be used with equipment or devices which require high level of reliability and the malfunction of with would directly endanger human life (such as medical instruments, transportation equipment, aerospace machinery, nuclear-reactor controllers, fuel controllers and other safety devices),YFW or anyone on its behalf, assumes no responsibility or liability for any damages resulting from such improper use of sale. This publication supersedes & replaces all information previously supplied. For additional information, please visit our website https://www.yfwdiode.com, or consult YFW sales office for further assistance.