Drain-Source Breakdown Voltage	V_{GS} = 0 V,I_D = 250 µA	500	-	-
Drain-Source Leakage Current	V_{DS} = 500 V, V_{GS} = 0 V	-	-	1
Gate Leakage Current	V_{GS} = ± 30 V, V_{DS} = 0 V	-	-	±100
Gate-Source Threshold Voltage	V_{DS} = V_{GS} , I_D = 250 µA	2	-	4
Drain-Source On-State Resistance	V_{GS} = 10 V, I_D = 2.5 A	-	1.3	1.6
Forward Transconductance	V_{DS} = 15 V, I_D = 2.5 A	-	4	-
Input	AUXDJ			


TC, Case Temperation, ℃
Current, Amps
VDS,Drain-to

Marking Diagram

Ordering information

Model name	Package	Unit Weight	Base Quantity	Packing Quantity
YFW5N50AF	TO-220F	0.06oz(1.74g)	50pcs/tube	1000PCS/Box 5000PCS/Carton

Package Dimensions

TO-220F

	Symbol	Millimeter		Inches	
		Min.	Max.	Min.	Max.
	A	4.50	4.90	0.177	K

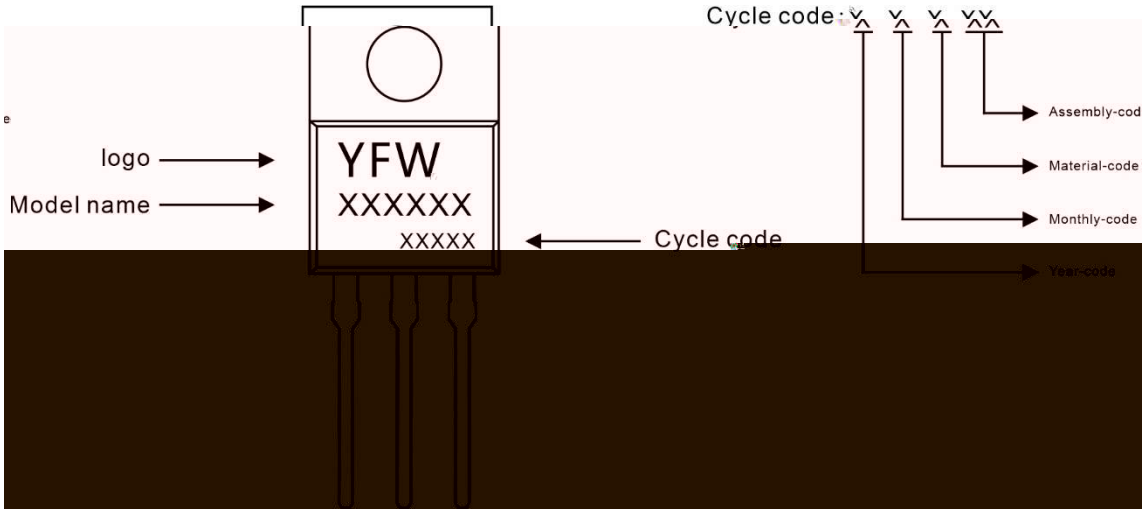

gD

D

YFW5N50AT				

g

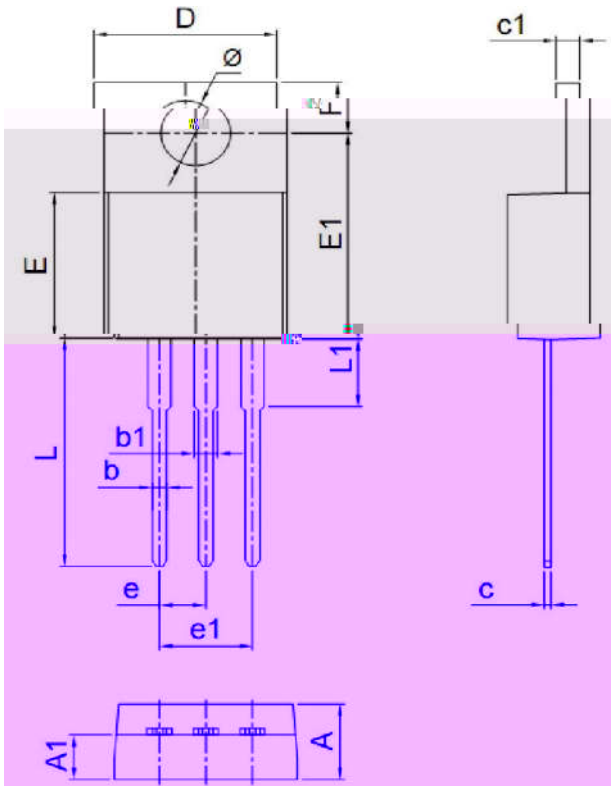

Marking Diagram

Ordering information

Model name	Package	Unit Weight	Base Quantity	Packing Quantity	

Marking Diagram

Ordering information

Model name	Package	Unit Weight	Base Quantity	Packing Quantity
YFW5N50AD	TO-252	[redacted]	2500pcs/reel	5000pcs/box 25000pcs/Carton

Package Dimensions

TO-252

Dim	Millimeter		Inches	
	Min.	Max.	Min.	Max.
A	2.20	2.50	0.087	0.098
	10.00	11.00	0.393	0.433

[redacted]

Marking Diagram

Ordering information

Model name	Package	Unit Weight	Base Quantity	Packing Quantity
YFW5N50AMJ				

Package Dimensions

TO-25

TO-

The information presented in this document is for reference only. GuangDong Youfeng Microelectronics Co.,Ltd. reserves the right to make changes without notice for the specification of the products displayed