-
-
-
-
-
-

TO-25

-
-
-
-

-
-
-
-

Figure 1. V_F Typical Forward Characteristics

I_F = 0~8A

T_{VJ} ranges from -55 ℃ to 175 ℃

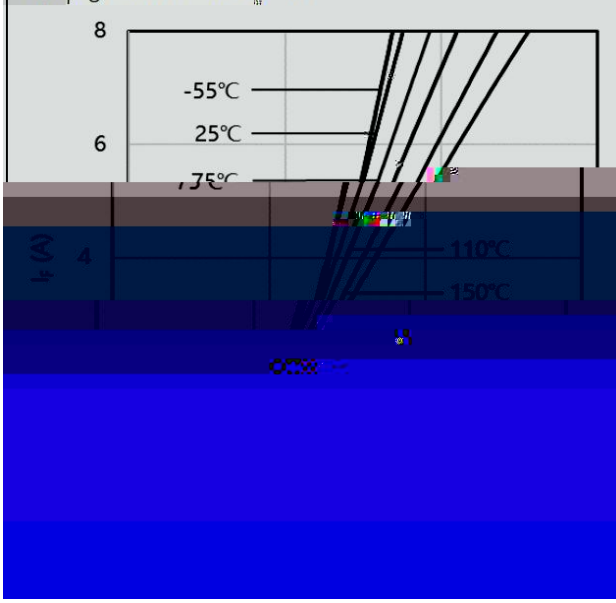

Figure 2. I_R Typical Reverse Characteristics

V_R = 300~700 V

T_{VJ} ranges from 25 ℃ to 175 ℃

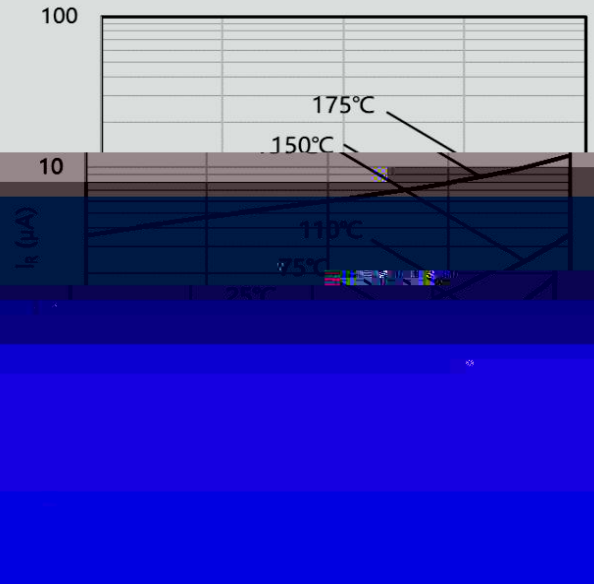

Figure 3. Total Capacitance Charge Characteristics

V_R = 0~650 V



Figure 4. Total Capacitance Characteristics

V_R = 0~650 V

M

Disclai