SIC SCHOTTKY BARRIER DIODE

Reverse Voltage - 650 V

Forward Current - 4 A

FEATURES

-
-
-
-
-
-

APPLICATIONS

-
-
-
-

BENEFITS

-
-
-
-

Maximum Ratings at Ta=25°C unless otherwise specified

Parameter	Test Conditions	Symbol	Value	Unit
		V_{RRM}		V
		I_F		A
		I_{FSM}		A
		I_{FRM}		A
		E_{AS}		mJ
		T_J		°C
		T_{STG}		°C
		$R_{\theta JC}$		°C/W

Note1:Pulse test: 300 μs pulse width, 2% duty cyc w

33721.5386 0 33721.538652.865rlTJ [(') 11 i1 i 103.2 102.79-3.8 --7J 986J 986J 4.392 [1

Electrical Characteristics unless otherwise specified

Parameter		Symbol	Value			Unit
			Min	Typ	Max	
		V_{DC}				V
		V_F				V
		I_R				μA
		Q_C				nC
		C				pF
		E_C				μJ

Note2:Pulse test: 300 μs pulse width, 1 % duty cycle

RATINGS AND CHARACTERISTIC CURVES

Figure 1. V_F Typical Forward Characteristics
I_F = 0~8A
T_{VJ} ranges from -55 ℃ to 175 ℃

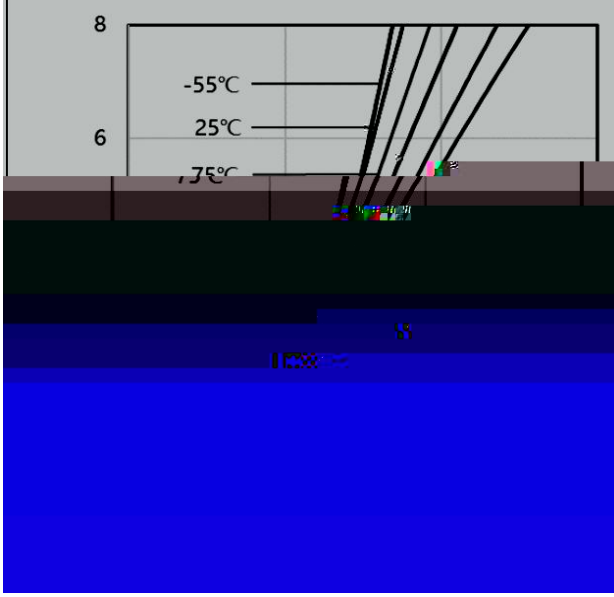

Figure 2. I_R Typical Reverse Characteristics
V_R = 300~700 V
T_{VJ} ranges from 25 ℃ to 175 ℃

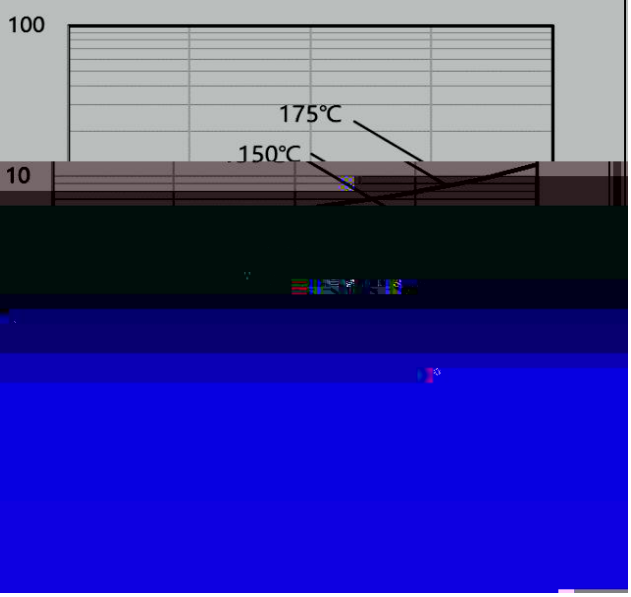

Figure 3. Total Capacitance Charge Characteristics
V_R = 0~650 V



Figure 4. Total Capacitance Characteristics
V_R = 0~650 V

Marking Diagram

Ordering information

Model name	Package	Unit Weight	Base Quantity	Packing Quantity
	TO-220FAC	0.06oz(1.7g)	50pcs/tube	1000PCS/Box 5000PCS/Carton

Package Dimensions

TO-220FAC

Symbol	Millimeter		Inches	
	Min.	Max.	Min.	Max.
A	9.95	10.25	0.392	0.404
B	2.95	3.25	0.116	0.128
C	1.25	1.45	0.049	0.057
E	12.95	13.25	0.51	0.52
F	0.40	0.60	0.016	0.024
G	1.30	1.45	0.051	0.057
H	TYP2.54		TYP 0.1	
I	TYP5.08		TYP 0.2	

24 я 0. 57 0.404

Disclaimer

The i