650V N-Channel Enhancement Mode Power MOSFET

MAIN CHARACTERISTICS

I_D	
V_{DSS}	
R_{DSON}-typ(@V_{GS}=10V)	(Typ:0.43Ω)

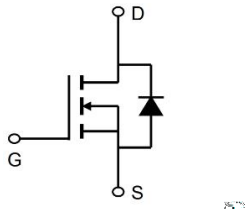



TO-220C

TO-2

FEATURES

-
-
-
-

APPLICATIONS

-
-
-

Ratings and Characteristic Curves

Figure 1. Maximum Effective Thermal Impedance, Junction-to-Case

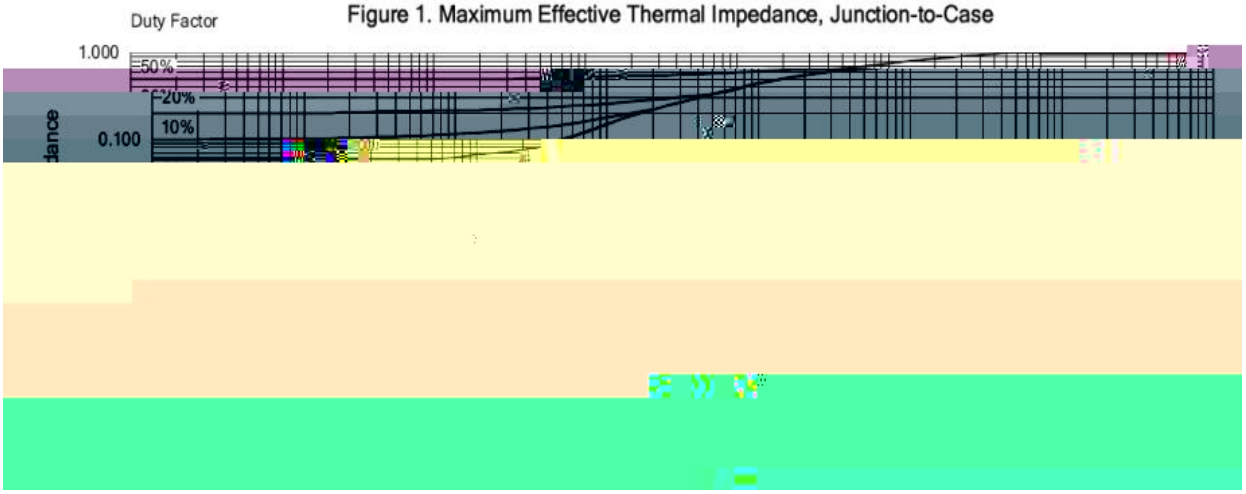

Figure 2. Maximum Power Dissipation vs Case Temperature

Figure 3. Maximum Continuous Drain Current

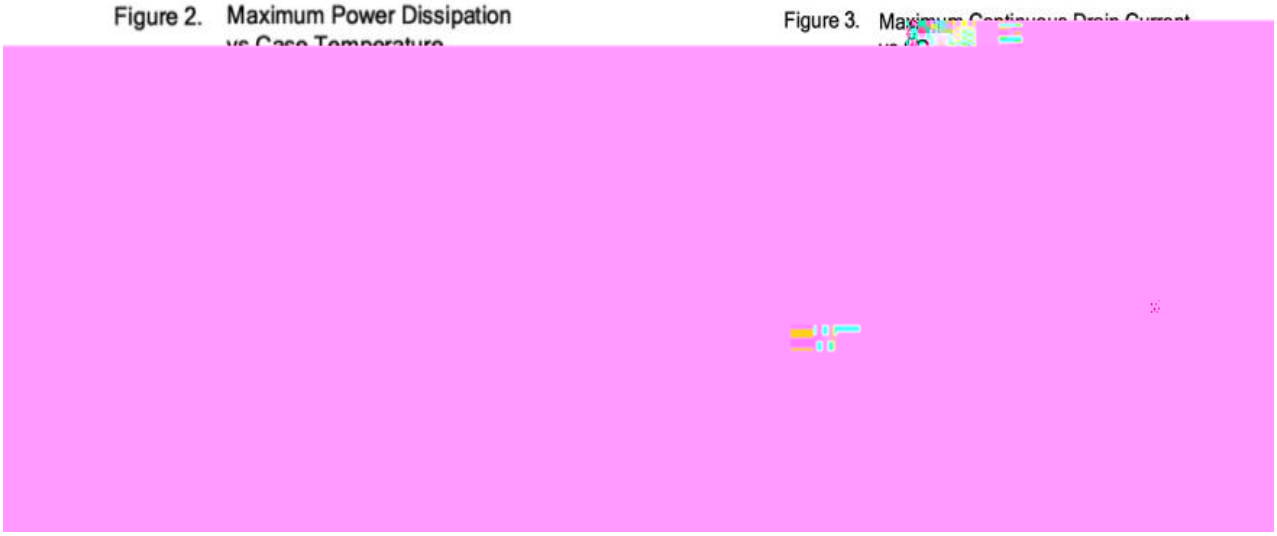

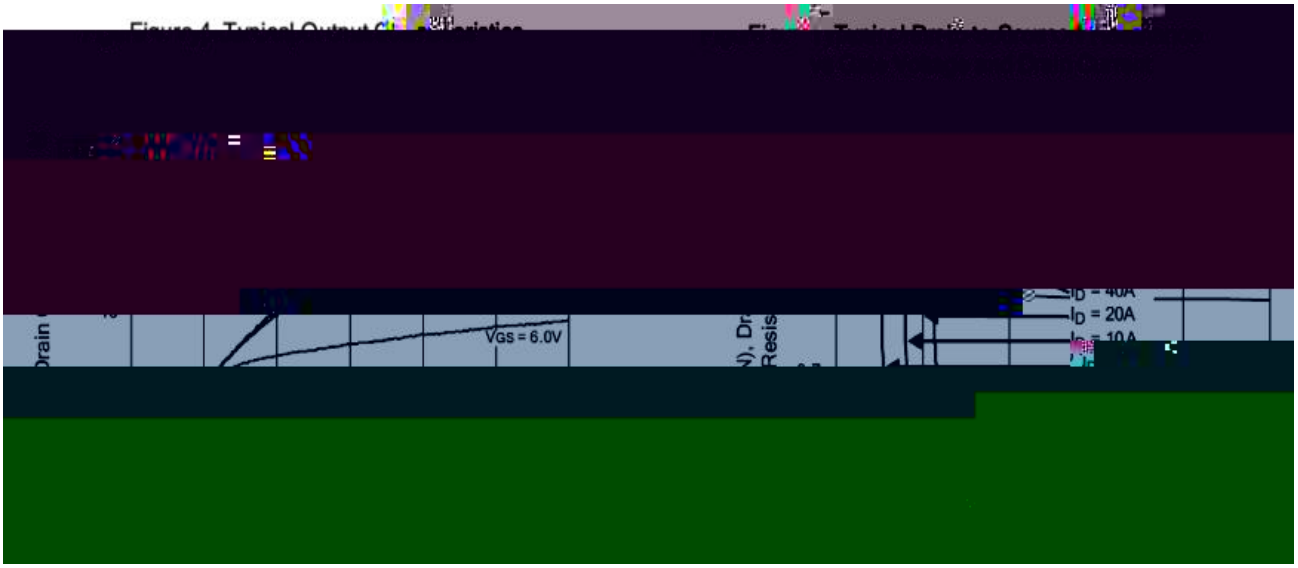

Ratings and Characteristic Curves

Figure 11. Typical Breakdown



Figure 13. Maximum Forward Bias Safe Operating Area

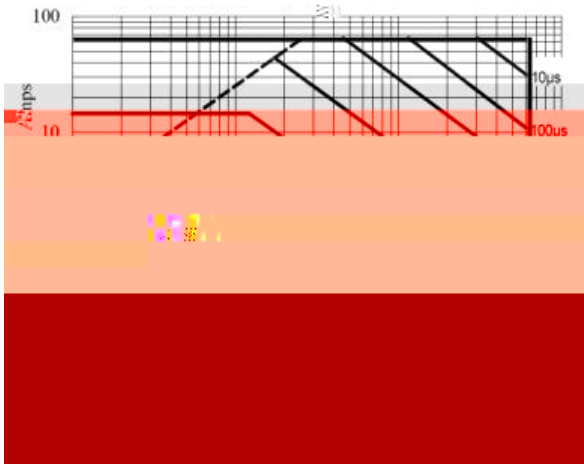

Figure 14. Typical Capacitance vs Drain-to-Source Voltage

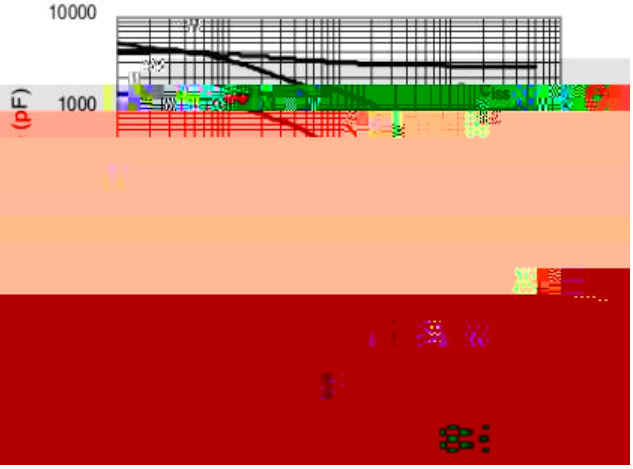

Figure 15 .Typical

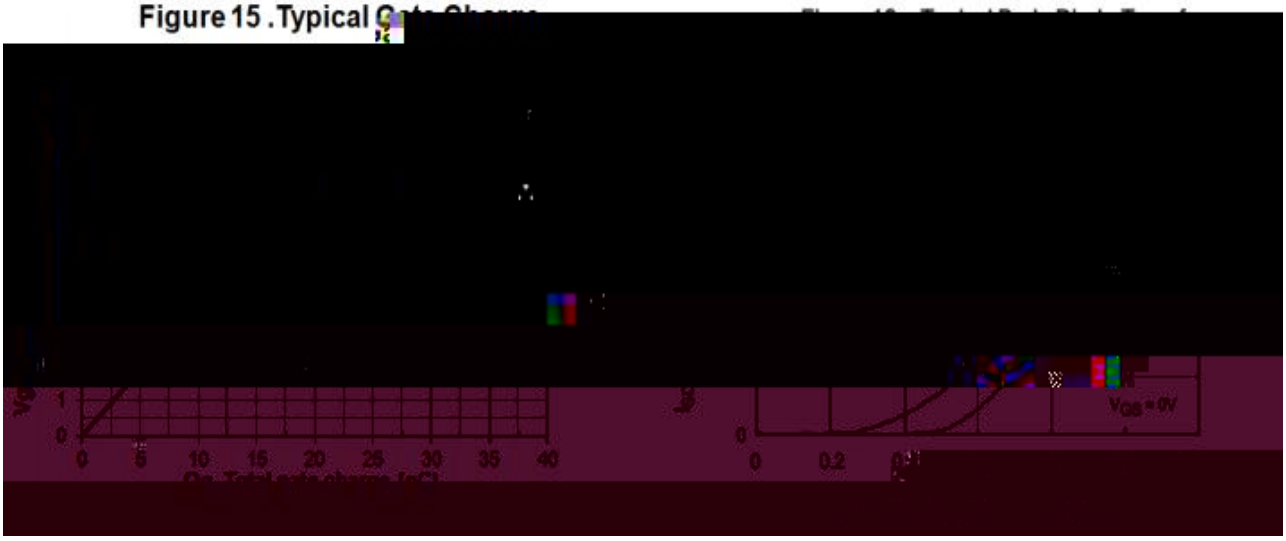

Marking Diagram

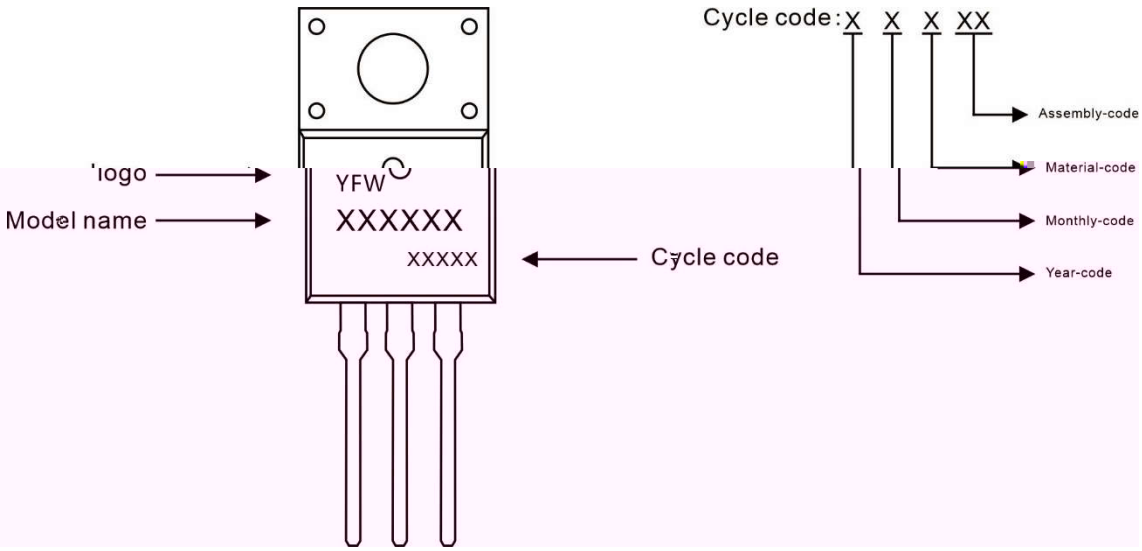

Ordering information

Model name	Package	Unit Weight	Base Quantity	Packing Quantity
YFW16N65AF	TO-220F	0.06oz(1.74g)	50pcs/tube	1000PCS/Box 5000PCS/Carton

Package Dimensions

TO-220F

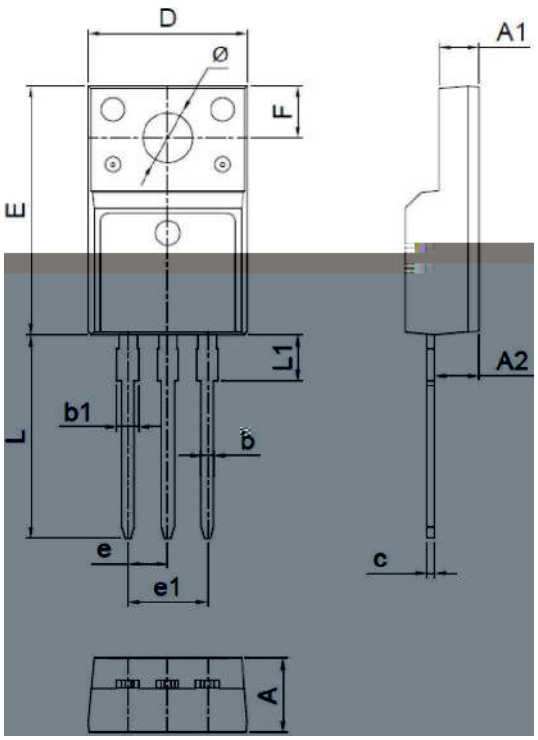

Symbol	Millimeter		Inches	
	Min.	Max.	Min.	Max.
A	4.50	4.90	0.177	0.193
A1	2.34	2.74	0.092	0.108
A2	2.66	2.86	0.105	0.113
b	0.75	0.85	0.030	0.033
b1	1.24	1.44	0.049	0.057
c	0.40	0.60	0.016	0.024
D	10.00	10.32	0.394	0.406
E	15.75	16.05	0.620	0.632
e	2.44	2.64	0.096	0.104
e1	4.88	5.28	0.192	0.208
F	3.10	3.5	0.122	0.138
L	13.50	13.90	0.531	0.547
L1	2.90	3.30	0.114	0.130
Φ	3.10	3.30	0.122	0.130

Marking Diagram

Ordering information

ท

YFW

The information presented in this document is for reference only. GuangDong Youfeng Microelectronics Co.,Ltd. reserves the right to make changes without notice for the specification of the products displayed herein to improve reliability, function or design or otherwise. The product listed herein is designed to be used with ordinary electronic equipment or devices, and not designed to be used with equipment or devices which