■Switching Diodes

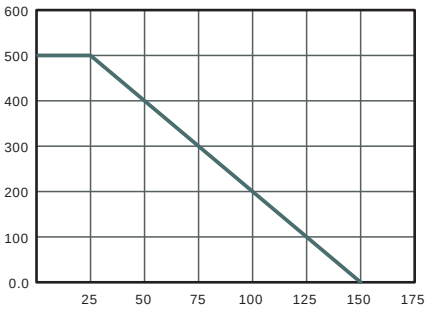
600
500
400
300
200
100
0.0
25
50
75
100
125
150
175

Ordering information

Package	Packing Description	Packing Quantity
SOD-123	Tape/Reel,7"reel	3000PCS/Reel 120000PCS/Carton

Package Dimensions

SOD-123

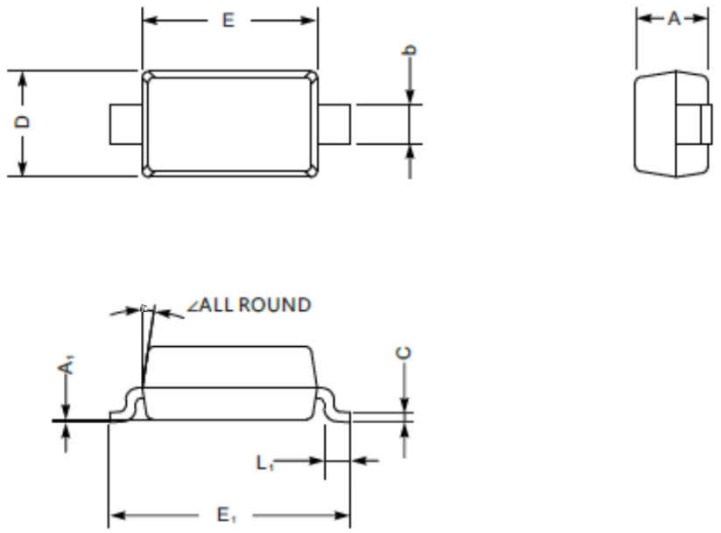

Dim.	Millimeter(mm)		mil	
	Min.	Max.	Min.	Max.
A	0.9	1.3	35	51
C	0.09	0.22	3.5	8.7
D	1.5	1.8	59	71
E	2.5	2.8	98	110
E1	3.6	3.9	142	154
b	0.5	0.7	20	28
L1	0.25	0.45	10	18
A1	-	0.2	-	8
	9°			

The recommended mounting pad size

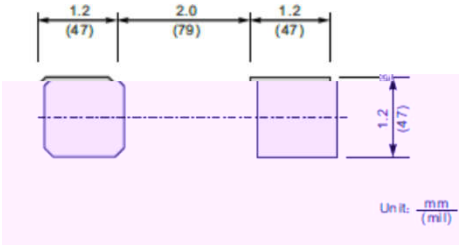

The information presented in this document is for reference only. GuangDong Youfeng Microelectronics Co.,Ltd. reserves the right to make changes without notice for the specification of the products displayed herein to improve reliability, function or design or otherwise. The product listed herein is designed to be used with ordinary electronic equipment or devices, and not designed to be used with equipment or devices which require high level of reliability and the malfunction of with would directly endanger human life (such as medical instruments, transportation equipment, aerospace machinery, nuclear-reactor controllers, fuel controllers and other safety devices),YFW or anyone on its behalf, assumes no responsibility or liability for any damages resulting from such improper use of sale. This publication supersedes & replaces all information previously supplied. For additional information, please visit our website https://www.yfwdiode.com, or consult YFW sales office for further assistance.