	

Fig.1 Forward Current Derating Curve

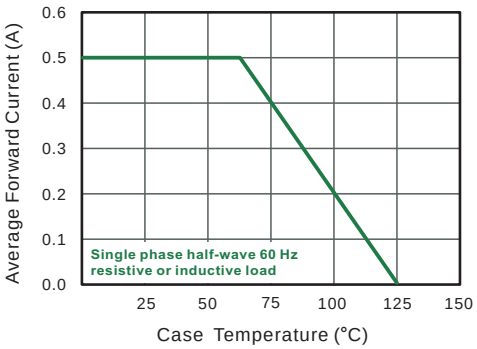

Fig.2 Typical Reverse Characteristics

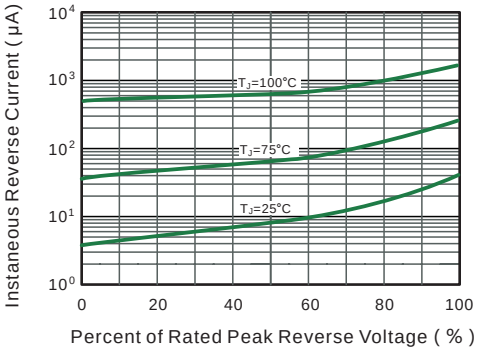

Fig.3 TYPICAL FORWARD VOLTAGE

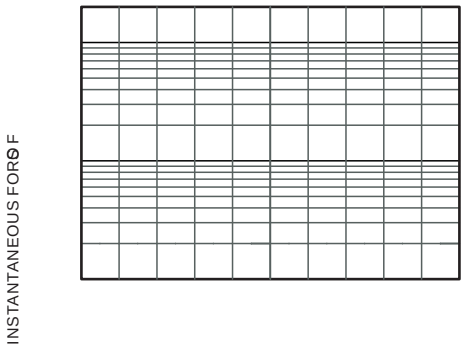

Fig.5 Maximum Non-Repetitive Peak Forward Surage Current

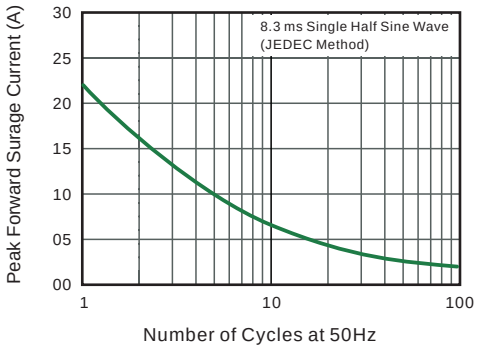

Ordering information

Package	Packing Description	Packing Quantity
SOD-323	Tape/Reel,7"reel	3000PCS/Reel 120000PCS/Carton

Package Dimensions

SOD-323

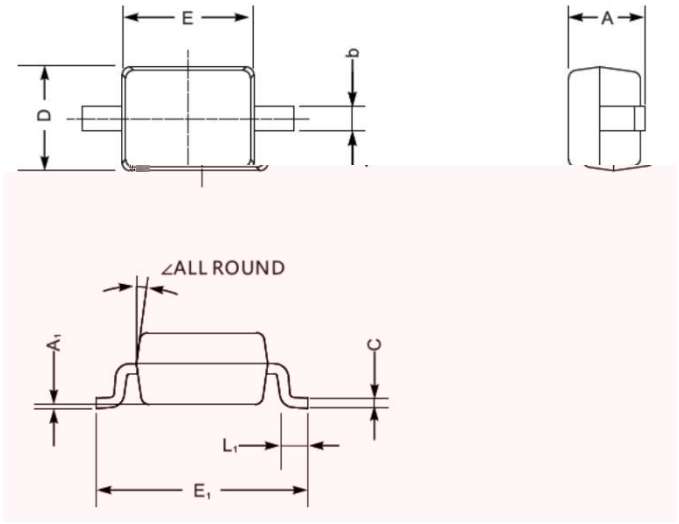

Dim.	Millimeter(mm)		mil	
	Min.	Max.	Min.	Max.
A	0.8	1.1	32	43
C	0.08	0.15	3.1	5.9
D	1.2	1.4	47	55
E	1.4	1.8	63	70
E1	2.55	2.75	100	108
b	0.25	0.4	9.8	16
L1	0.2	0.45	7.9	16
A1	-	0.2	-	8
	9°			

The recommended mounting pad size

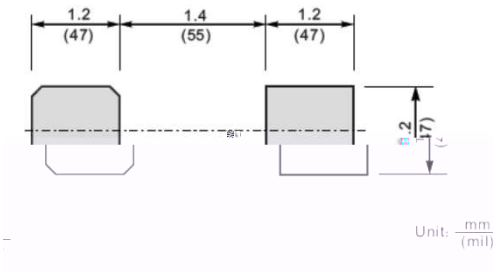

The information presented in this document is for reference only. GuangDong Youfeng Microelectronics Co.,Ltd. reserves the right to make changes without notice for the specification of the products displayed herein to improve reliability, function or design or otherwise. The product listed heN