SuAface Mount Schottky RectifieA

ReveABe Voltage – "0-40 V

FoAwaAd CuAAent - ! A

FEALMRES



- ⧫Metal silicon junction, majority carrier conduction
- ⧫Guarding for overvoltage protection
- ⧫Low power loss, high efficiency
- ⧫High current capability
- ⧫low forward voltage drop
- ⧫High surge capabilit
- ⧫For use in low voltage, high frequency inverters,
- ⧫free wheeling, and polarity protection applications

Maximum RatingB and ElectAical chaAacteAiBtic

Ratings at 25 ° C ambient temperature unless otherwise specified.

PaAameteA	SymbolB	MBR!"0WS	MBR!30WS	MBR!40WS	MnitB
Maximum Repetitive Peak Reverse Voltage	V_{RRM}	20	30	40	V
Maximum RMS voltage	V_{RMS}	14	21	28	V

Fig.2 Typical Reverse Characteristics

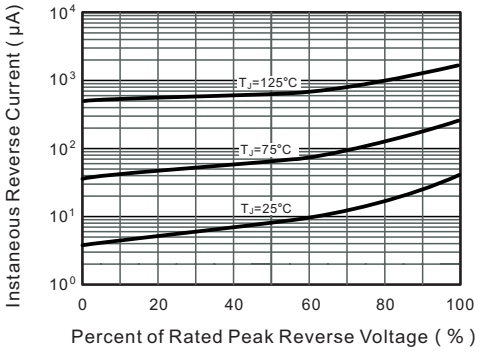

Fig.3 Typical Forward Characteristic

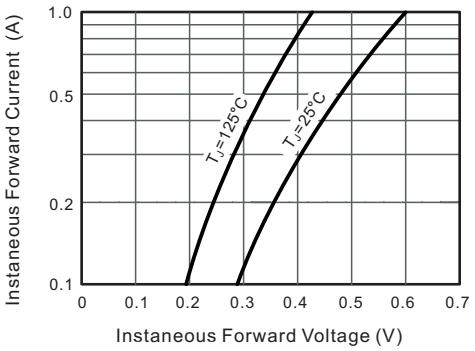

Fig.4 Typical Junction Capacitance

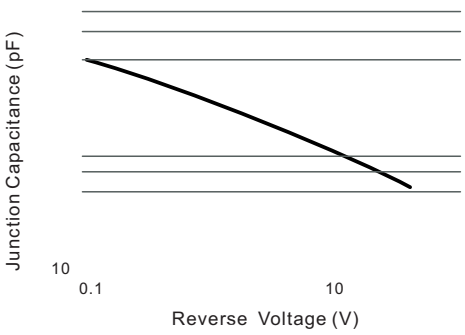

Fig.5 Maximum Non-Repetitive Peak Forward Surage Current

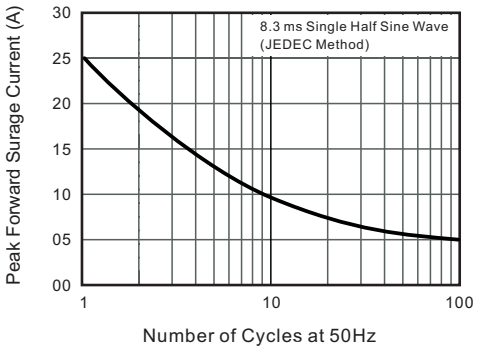

Ordering information

Package	Packing Description	Packing Quantity
SOD-323	Tape/Reel,7"reel	3000PCS/Reel 120000PCS/Carton

Package Dimensions

SOD-323

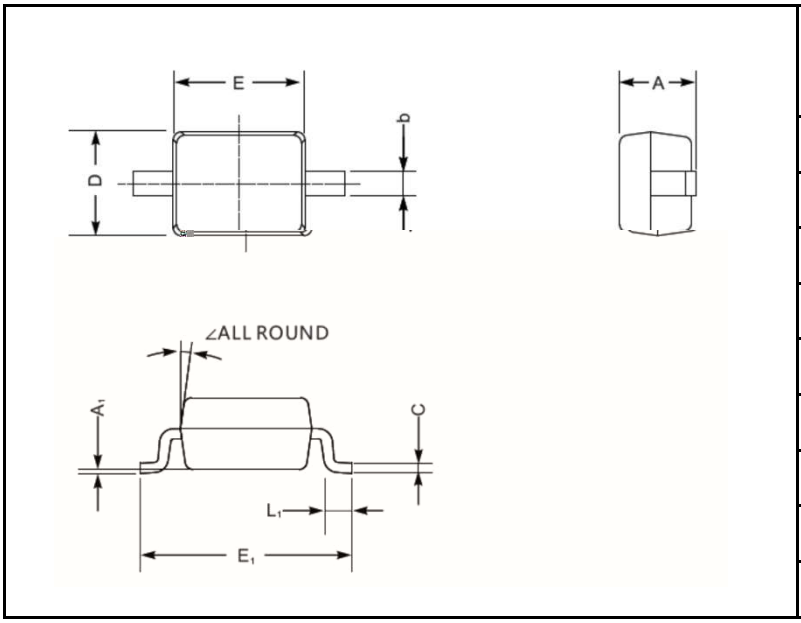

Dim.	Millimeter(mm)		mil	
	Min.	Max.	Min.	Max.
A	0.8	1.1	32	43
C	0.08	0.15	3.1	5.9
D	1.2	1.4	47	55
E	1.4	1.8	63	70
E1	2.55	2.75	100	108
b	0.25	0.4	9.8	16
L1	0.2	0.45	7.9	16
A1	-	0.2	-	8
	9°			

The recommended mounting pad size

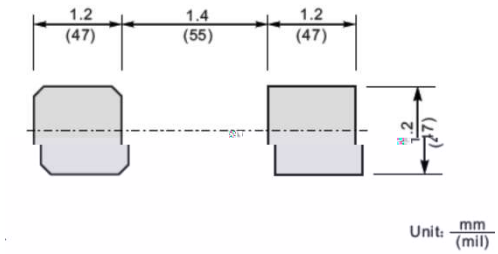

The information presented in this document is for reference only. GuangDong Youfeng Microelectronics Co.,Ltd. reserves the right to make changes without notice for the specification of the products displayed herein to improve reliability, function or design or otherwise. The product listed herein is designed to be used with ordinary electronic equipment or devices, and not designed to be used with equipment or devices which require high level of reliability and the malfunction of with would directly endanger human life (such as medifof stV ens , я d̯ 0y otmat ̈O n ŷ requcp نم