Ordering information

Package	Packing Description	Packing Quantity
SOD-323	Tape/Reel,7”reel	3000PCS/Reel 120000PCS/Carton

Package Dimensions

SOD-323

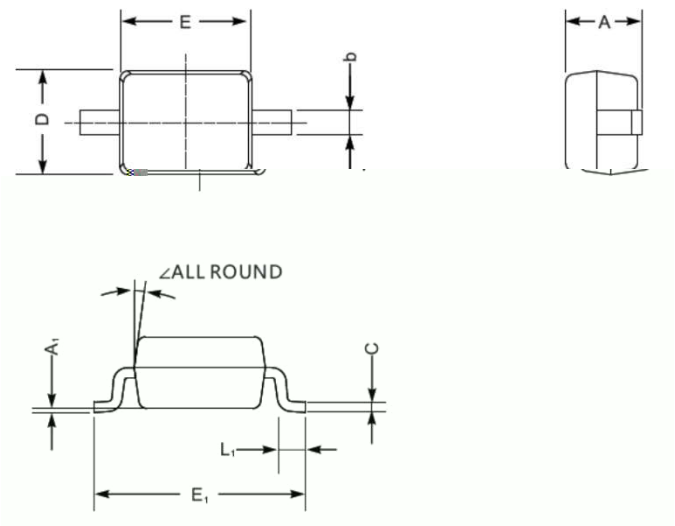

Dim.	Millimeter(mm)		mil	
	Min.	Max.	Min.	Max.
A	0.8	1.1	32	43
C	0.08	0.15	3.1	5.9
D	1.2	1.4	47	55
E	1.4	1.8	63	70
E1	2.55	2.75	100	108
b	0.25	0.4	9.8	16
L1	0.2	0.45	7.9	16
A1	-	0.2	-	8
	9°			

The recommended mounting pad size

