US801DS THRU US810DS TO-252

Surface Mount Ultrafast Recovery Rectifier

Reverse Voltage - 100 to 1000 V

Forward Current - 8 A

Fig.1 Maximum Average Forward Current Rating

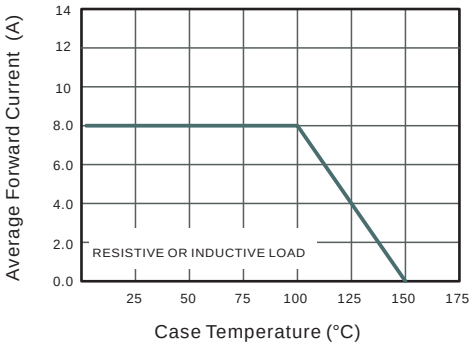

Fig.2 Typical Reverse Characteristics

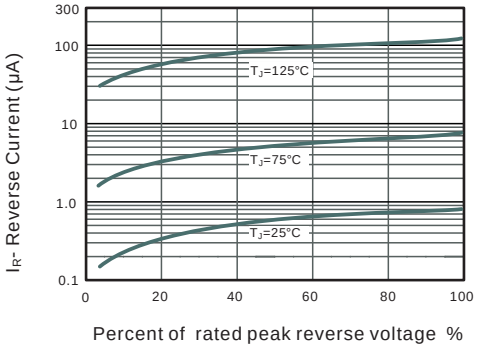

Fig.4 Typical Junction Capacitance

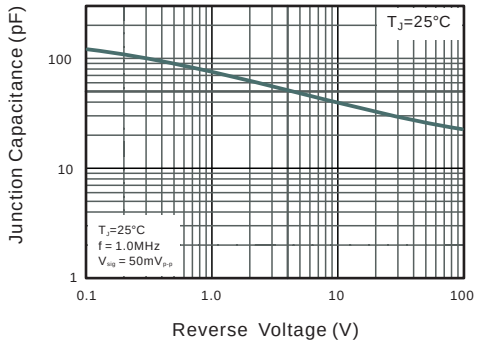

90

60

30

Marking Diagram

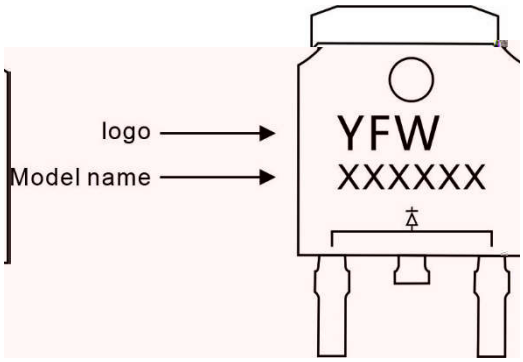

Ordering information

Model name	Package	Unit Weight	Base Quantity	Packing Quantity
	TO-252	0.011oz(0.32g)	2500pcs/reel	5000pcs/box 25000pcs/Carton

Package Dimensions

TO-252

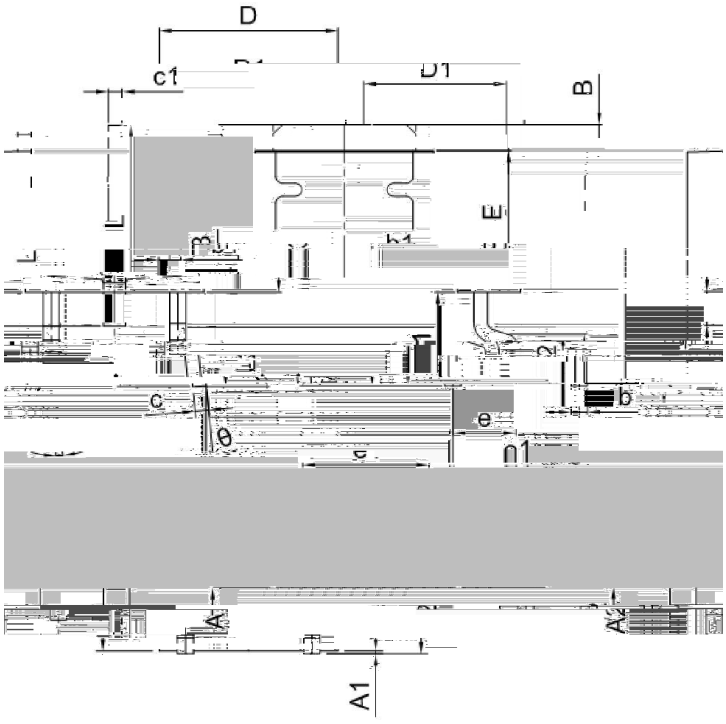

Dim	Millimeter		Inches	
	Min.	Max.	Min.	Max.
A	2.20	2.50	0.087	0.098
A1	0.00	0.12	0.000	0.005
A2	2.20	2.40	0.087	0.094
B	1.20	1.60	0.047	0.063
b	0.50	0.70	0.020	0.028
b1	0.70	0.90	0.028	0.035
c	0.40	0.60	0.016	0.024
c1	0.40	0.60	0.016	0.024
D	6.35	6.65	0.250	0.262
D1	5.20	5.40	0.205	0.213
E	5.40	5.70	0.213	0.224
e	2.20	2.40	0.087	0.094
e1	4.40	4.80	0.173	0.189
L	10.00	11.00	0.393	0.433
L1	2.70	3.10	0.106	0.122
L2	1.40	1.80	0.055	0.071
L3	0.90	1.50	0.035	0.059

The information presented in this document is for reference only. GuangDong Youfeng Microelectronics Co.,Ltd. reserves the right to make changes without notice for the specification of the products displayed herein to improve reliability, function or design or otherwise. The product listed herein is designed to be used with ordinary electronic equipment or devices, and not designed to be used with equipment or devices which require high level of reliability and the malfunction of with would directly endanger human life (such as medical instruments, transportation equipment, aerospace machinery, nuclear-reactor controllers, fuel controllers and other safety devices),YFW or anyone on its behalf, assumes no responsibility or liability for any damages resulting from such improper use of sale. This publication supersedes & replaces all information previously supplied. For additional information, please visit our website https://www.yfwdiode.com, or consult YFW sales office for further assistance.