- Small Package
- Low forward voltage :$V_{F(3)}$ = 0.9 V(Typ.)
- Fast Reverse Recovery Time :trr = 1.6 ns(Typ.)
- Small Total Capacitance :C_T = 0.9pF(Typ.)

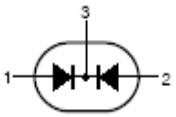

Parameter	Symbol	Rating	Unit
Peak Reverse voltage	V_{RM}	85	V
DC Blocking Voltage	V_R	80	
Average Rectified Output Current	Io	100	mA
Peak forward surge current	I_{FM}	300	
Power Dissipation	P_D	150	mW
Junction Temperature	T_J	125	
Storage temperature range	T_{stg}	-55 to 150	

Ordering information

Package	Packing Description	Base Quantity	Packing Quantity
SOT-23	Tape/Reel,7”reel	3000pcs/Reel	24000PCS/Box 120000PCS/Carton

Package Dimensions

SOT-23

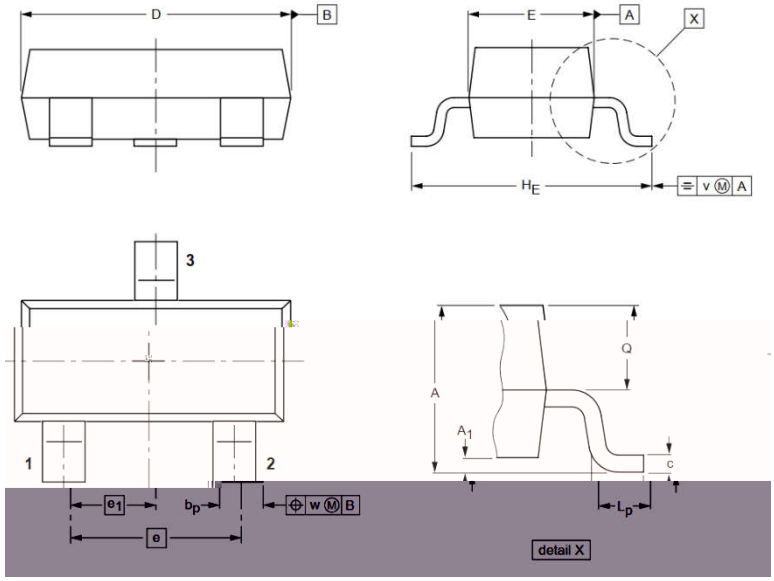

Dim.	Millimeter (mm)		mil	
	Min.	Max.	Min.	Max.
A	0.9	1.15	35	45
A1	0.1		3.9	
bp	0.38	0.48	15	19
C	0.09	0.15	3.54	5.9
D	2.8	3.0	110	118
E	1.2	1.4	47	55
E	1.9		75	

The recommended mounting pad size

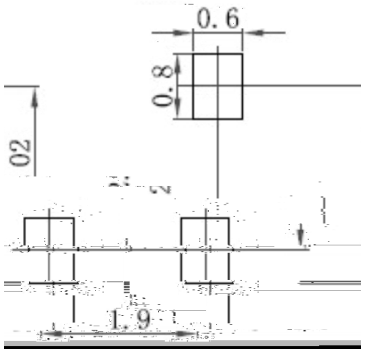

YFW®
佑风微

1SS184