5

FIG. 1- DERATING CURVE OUTPUT RECTIFIED CURRENT

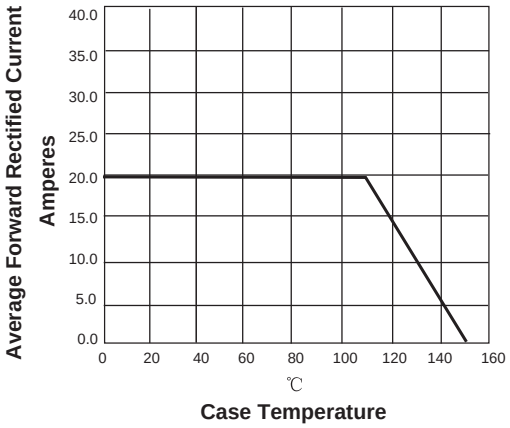


FIG. 2-MAXIMUM NON-REPETITIVE PEAK FORWARD SURGE CURRENT PERLEG

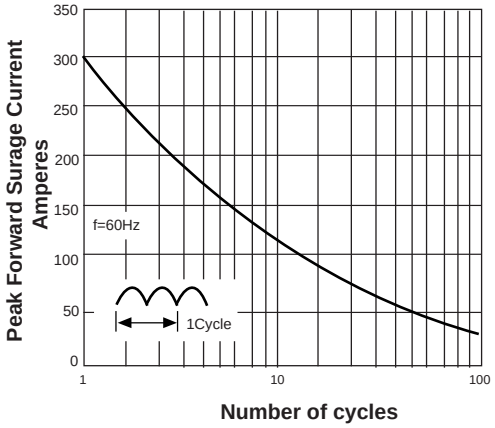


FIG. 3-TYPICAL FORWARD VOLTAGE CHARACTERISTICS

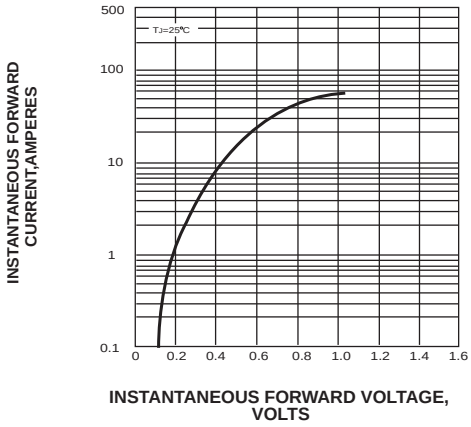


FIG. 4-TYPICAL REVERSE LEAKAGE CHARACTERISTICS

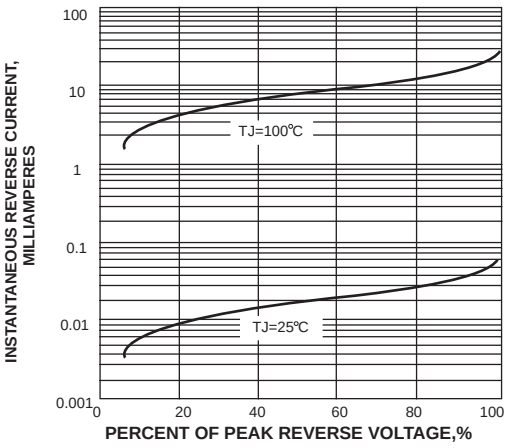

## Marking Diagram

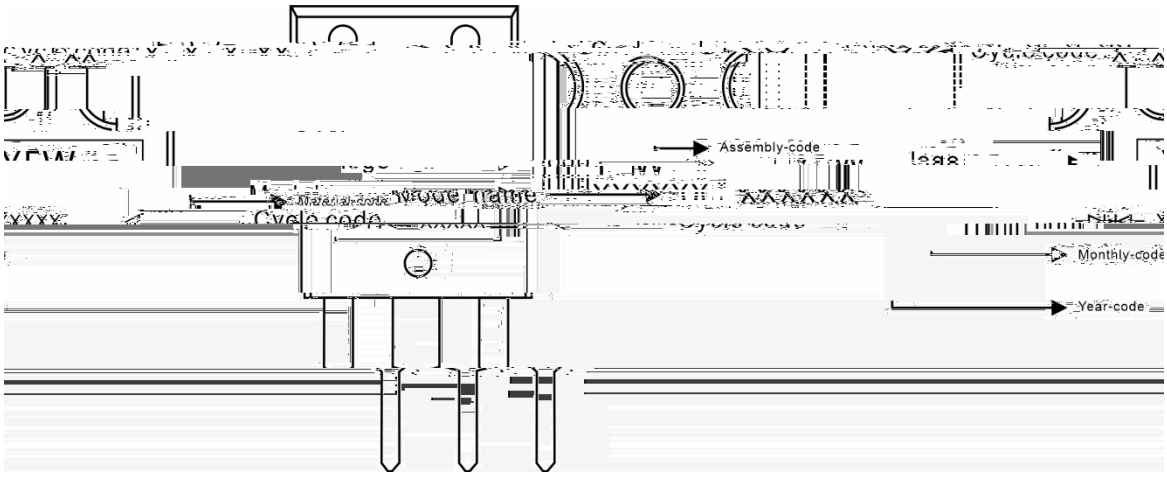


## Ordering information

| Model name | Package | Unit Weight | Base Quantity | Packing Quantity |
|---|---|---|---|---|
| **MBR4045PTS** | TO-247S | 0.158oz(4.48g) | 30pcs/tube | 600PCS/Box 2400PCS/Carton |

## Package Dimensions

**TO-247S**

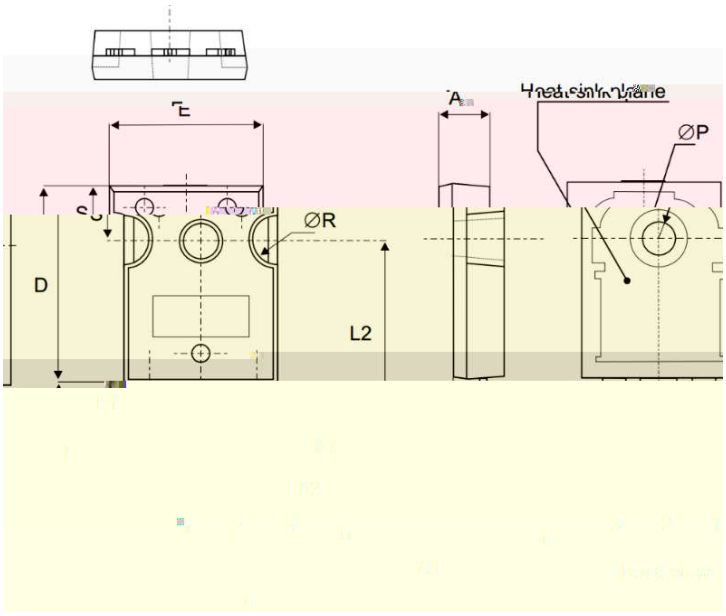


| Dim. | Millimeter | | Inches | |
|---|---|---|---|---|
| | Min. | Max. | Min. | Max. |
| E | 15.40 | 15.80 | 0.60 | 0.62 |
| D | 19.50 | 20.50 | 0.77 | 0.80 |
| S | 5.30 | 5.50 | 0.21 | 0.22 |
| ⌀R | 4.50 | 5.50 | 0.18 | 0.22 |
| ⌀P | 3.40 | 3.80 | 0.13 | 0.15 |
| L | 14.0 | 14.5 | 0.55 | 0.57 |
| L1 | 3.70 | 4.30 | 0.15 | 0.17 |
| L2 | 18.5 | | 0.73 | |
| e | 5.20 | 5.70 | 0.20 | 0.22 |
| b | 1.15 | 1.25 | 0.04 | 0.05 |
| b1 | 1.80 | 2.20 | 0.07 | 0.09 |
| b2 | 2.80 | 3.20 | 0.11 | 0.13 |
| A | 4.80 | 5.00 | 0.19 | 0.20 |
| c | 0.40 | 0.70 | 0.01 | 0.02 |
| A1 | 2.30 | 2.45 | 0.09 | 0.10 |