Small Signal Schottky Diode

Pinning

1.Cathode

FEATURES





Marking Code	
MBR0530W	B3.

Absolute Maximum Ratings (Ta=25 unless otherwise noted)

Parameter	Symbols	MBR0530W	Units
	V_{RRM}		V
	I_{FAV}		A
	I_{FSM}		A
	P_D		mW
	$R_{\theta JA}$		/W
	T_j		
	T_{stg}		

Note: 1. Device mounted on an FR4 Printed-Circuit Board (PCB), single-side copper, tin-plated and standard footprint.

Electrical Characteristics (TJ=25 , unless otherwise noted)

Parameter	Test Conditions	Symbols	Min	Type	Max	Units
		V_{F1}				V
		V_{F2}				
		I_R				μA
	μ	V_R				V
		C_D				pF

Ratings And Characteristic Curves

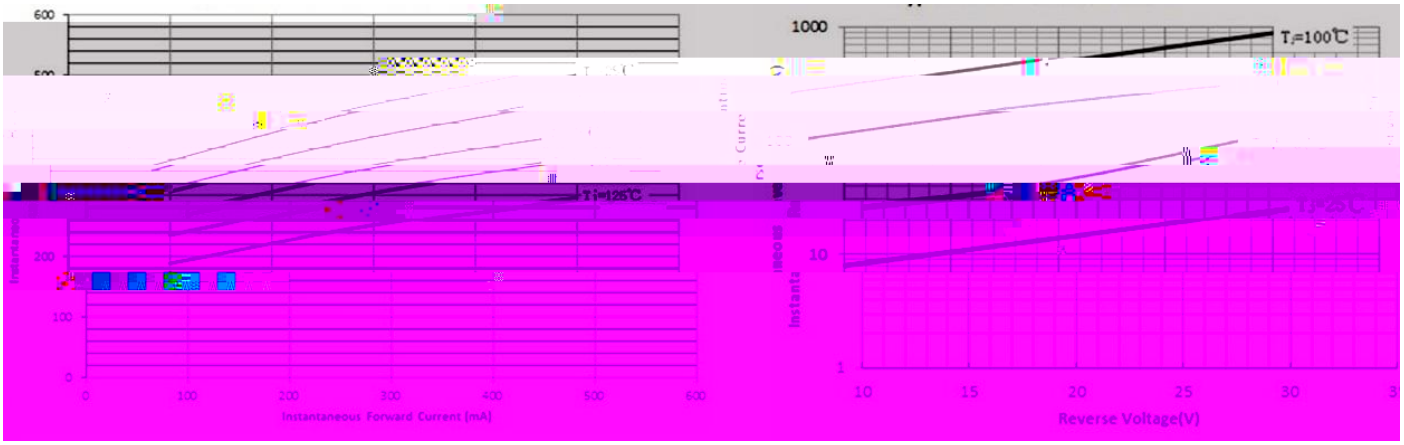

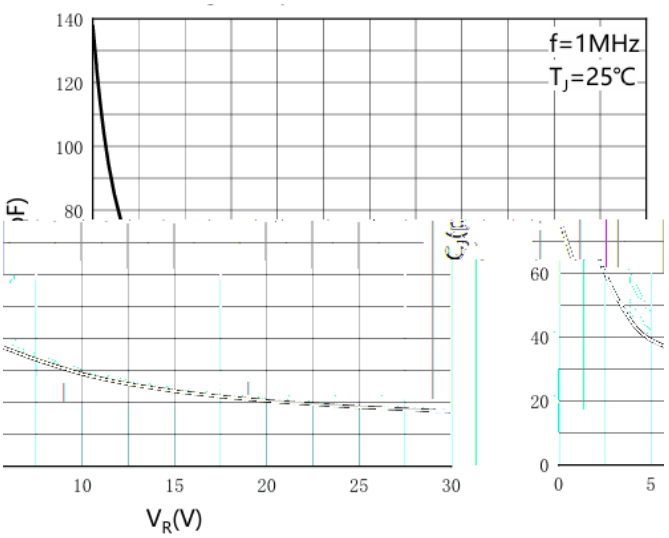

Ordering information

Package	Packing Description	Packing Quantity
SOD-123	Tape/Reel,7"reel	3000PCS/Reel 120000PCS/Carton

Package Dimensions

SOD-123

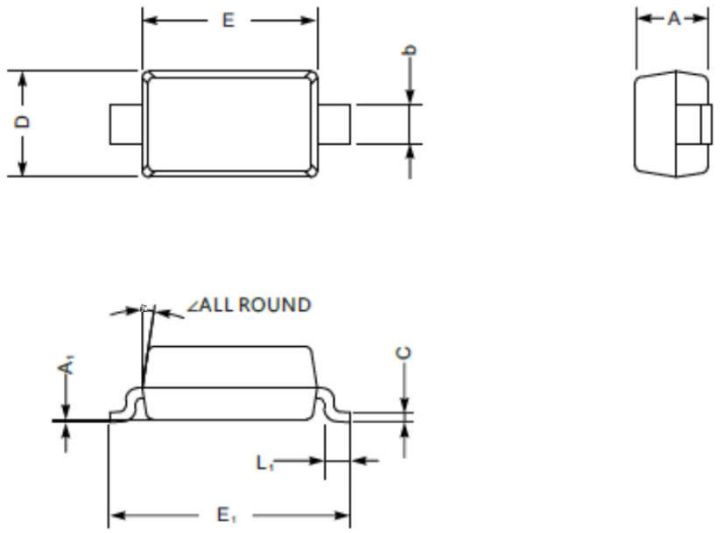

Dim.	Millimeter(mm)		mil	
	Min.	Max.	Min.	Max.
A	0.9	1.3	35	51
C	0.09	0.22	3.5	8.7
D	1.5	1.8	59	71
E	2.5	2.8	98	110
E1	3.6	3.9	142	154
b	0.5	0.7	20	28
L1	0.25	0.45	10	18
A1	-	0.2	-	8
	9°			

The recommended mounting pad size

