YFW®
佑风微

SS1040SP THRU SS1

!"#$% &# %! '

(!) * !#$% #$+, ! ' -#, $

. /" %	. /"#$% 23 $-#-4
5 (6788	5000PCS/Reel 50000PCS/Carton

5 (6788

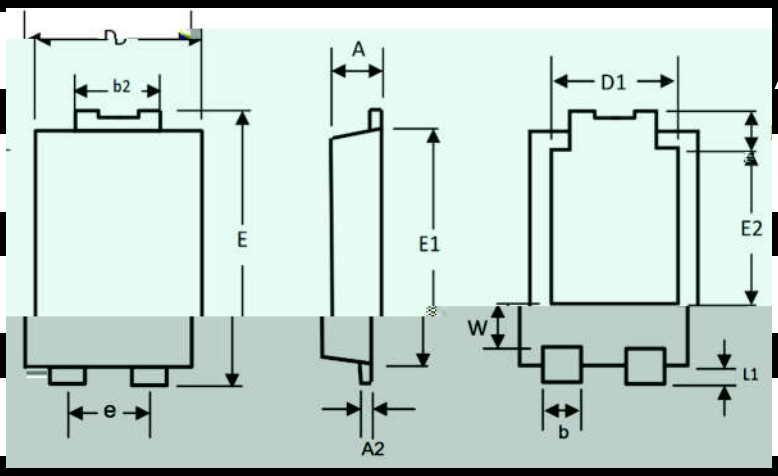

	#$9	=9	#$9	=9
A	1.1	1.2	43	47
b1	0.8	1	32	39
b2	1.7	1.9	67	75
D1	3.054		120	
E	6.4	6.6	252	260
E1	5.3	5.5	209	217
L	0.8	1	32	39
L1	0.5	0.7	20	28
W	1.1	1.4	43	55

5>* !*/, ' ' *$)*) ' ,3$-#$% 1) 0#?*

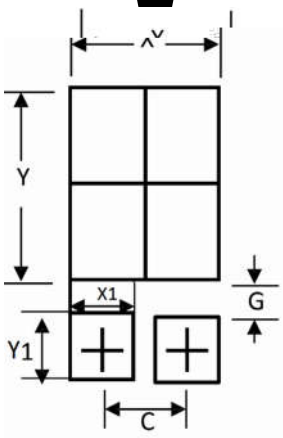

Dim	Min
C	1.8
G	0.9
X	3.4
X1	1.4
Y	4.9
Y1	1.4

unit:mm

