SCHOTTKY BARRIER RECTIFIER

Reverse Voltage - 100 V

Forward Current - 40 A

FEATURES

- Low forward voltage
- High current capability
- High forward surge capability
- Low power losses High efficiency
- Guarding for over voltage protection

MECHANICAL DATA

- Case: TO-220AB/CT TO-220F/FCT TO-263/DC
- Solder bath temperature275 maximum,10s per JESD22-106

Primary Characteristic

Maximum Ratings (Per Leg) at Ta=25°C unless otherwise specified

Parameter		Symbols	Value	Units
Maximum Repetitive Peak Reverse Voltage		V_{RRM}	100	V
Maximum RMS voltage		V_{RMS}	70	V
Maximum DC Blocking Voltage		V_{DC}	100	V
Maximum Average Forward Rectified Current	Per Leg	I_o	20	A
	Total		40	
Peak Forward Surge Current, 8.3ms Single Half Sine-wave		I_{FS}		

RATINGS AND CHARACTERISTIC CURVES

FIG.1 MAXIMUM FORWARD CURRENT DERATING CURVE

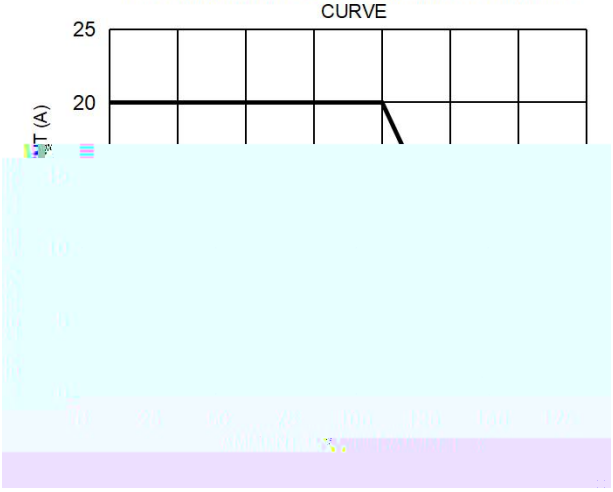

FIG. 2 MAXIMUM NON-REPETITIVE FORWARD SURGE CURRENT PER LEG

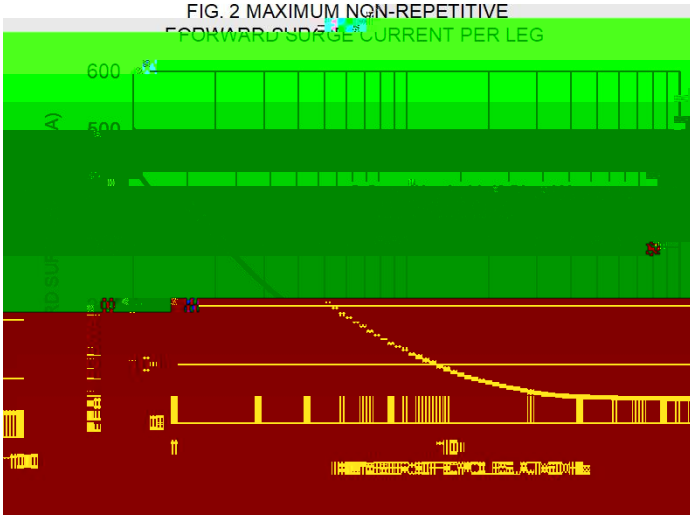

FIG. 3 TYPICAL FORWARD CHARACTERISTICS PER LEG

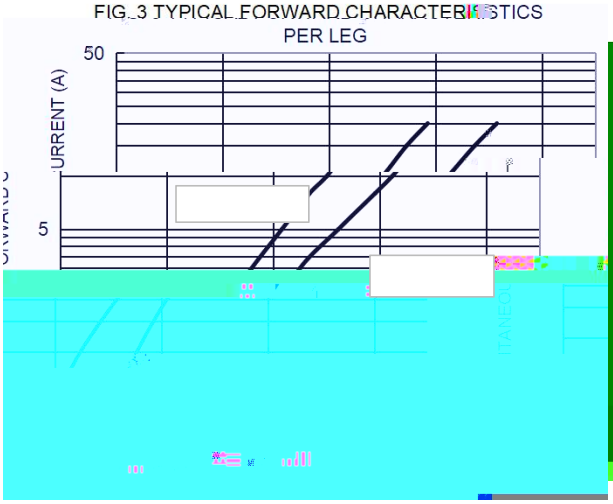

FIG. 4 TYPICAL REVERSE CHARACTERISTICS PER LEG

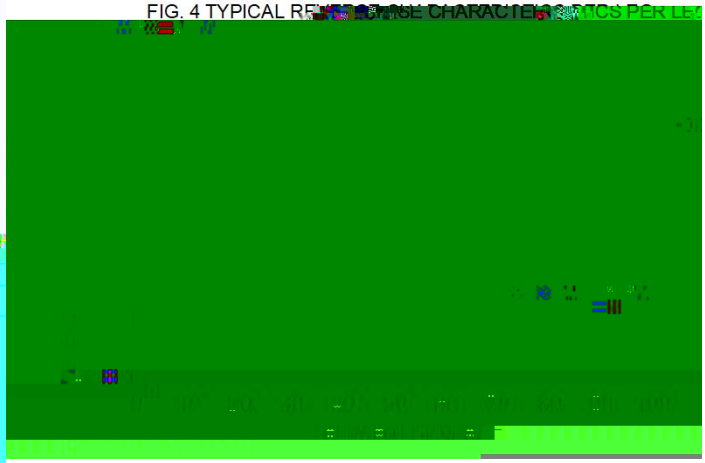

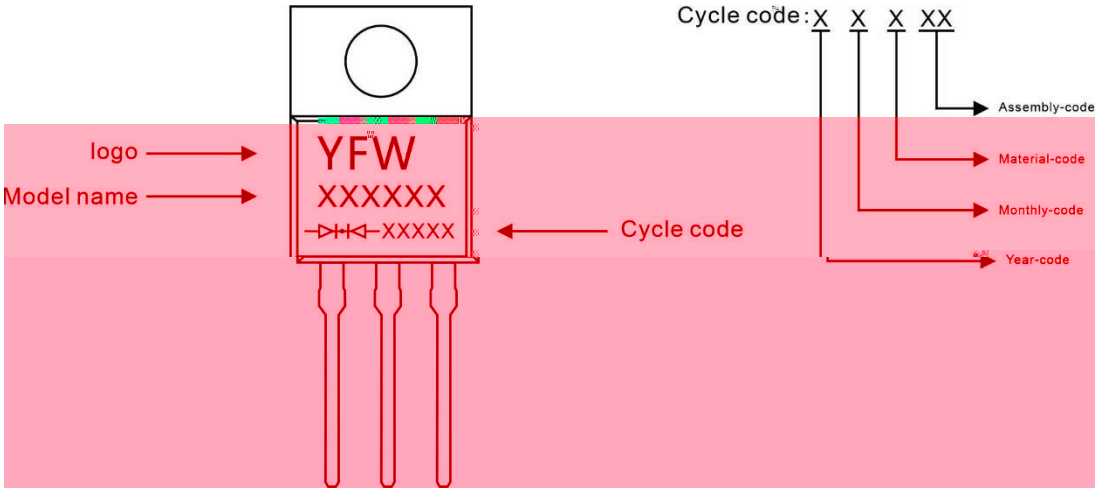

MBR40100CT	! ! "#$%	"&"'()*+&,-./%%	0"12345678%%	+"""9:;4$(<%0"""9:;4:=>5(?%

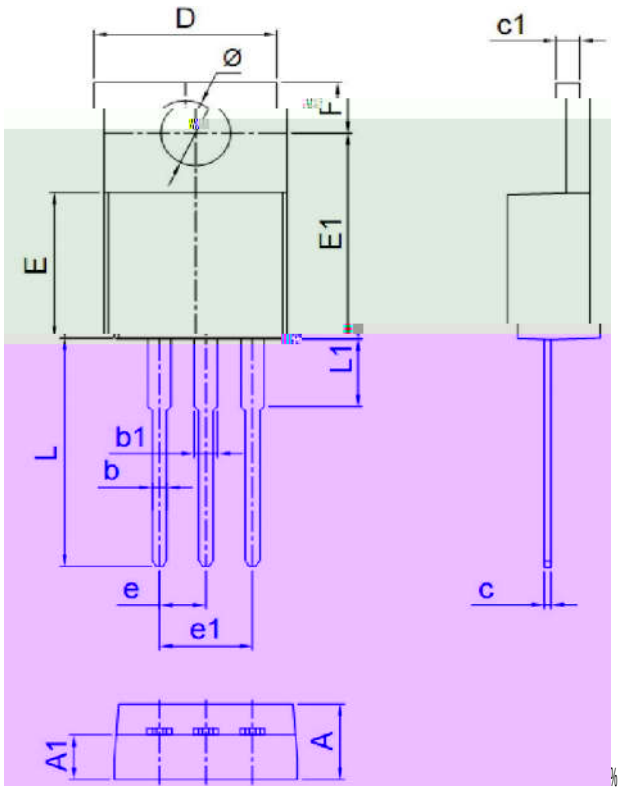

#%	@&A"%	@&'"%	"&+-,%	"&+B0%
#+%				%
7%	"&'+%	"&,+%	"&"!B%	"&"A-%
7+%	+&+'%	+&A'%	"&"@-%	"&"0@%
2%	"&A"%	"&0"%	"&"+!%	"&"!"%
2+%	+&+'%	+&A'%	"&"@-%	"&"0@%
C%	,&,"%	+"&!"%	"&A,"%	"&@"!%
D%	B&0"%	B&,"%	"&AA0%	"&A0"%
D+%	+!&""%	+!&0"%	"&@'!%	"&@,!%
8%	!&@@%	!&-@%	"&",-%	"&+"@%
8+%	@&BB%	0&!B%	"&+,!%	"&!"B%
E%	!&-"%	!&B"%	"&+"!%	"&++"%
F%	+A&!"%	+A&B"%	"&0!"%	"&0@A%
F+%	A&B"%	@&!"%	"&+0"%	"&+-0%
G%	A&-"%	A&,-%	"&+@!%	"&+0-%

%

Marking Diagram

Ordering information

Model name	Package	Unit Weight	Base Quantity	Packing Quantity
MBR40100FCT	TO-220F	0.06oz(1.74g)	50pcs/tube	1000PCS/Box 5000PCS/Carton

Package Dimensions

TO-220F

Symbol	Millimeter		Inches	
	Min.	Max.	Min.	Max.
A	4.50	4.90	0.177	0.193
A1	2.34	2.74	0.092	0.108
A2	2.66	2.86	0.105	0.113
b	0.75	0.85	0.030	0.033
b1	1.24	1.44	0.049	0.057
c	0.40	0.60	0.016	0.024
D	10.00	10.32	0.394	0.406
E	15.75	16.05	0.620	0.632
e	2.44	2.64	0.096	0.104
e1	4.88	5.28	0.192	0.208

F e 0.192 01208 0620 02e0 01057

The information presented in this document is for reference only. GuangDong Youfeng Microelectronics Co.,Ltd. reserves the right to make changes without notice for the specification of the products displayed herein to improve reliability, function or design or otherwise. The product listed herein is designed to be used with ordinary electronic equipment or devices, and not designed to be used with equipment or devices which

R R Y tt † ض U/ oX Ꝁ