FIG. 1- DERATING CURVE OUTPUT RECTIFIED CURRENT

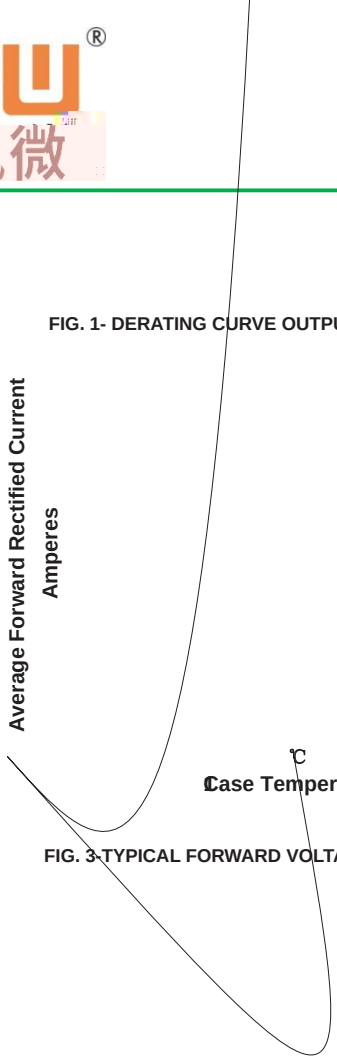

FIG. 2-MAXIMUM NON-REPETITIVE PEAK FORWARD SURGE CURRENT PERLEG

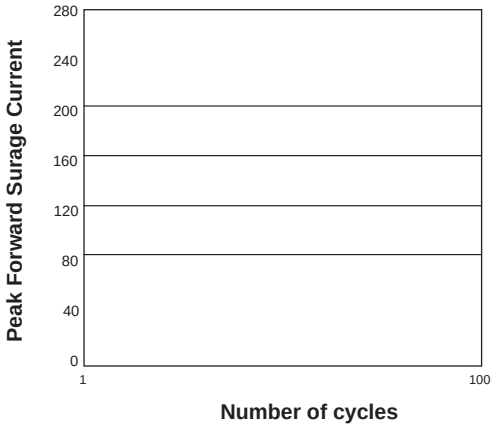

FIG. 3-TYPICAL FORWARD VOLTAGE CHARACTERISTICS

FIG. 4-TYPICAL REVERSE LEAKAGE CHARACTERISTICS

Marking Diagram

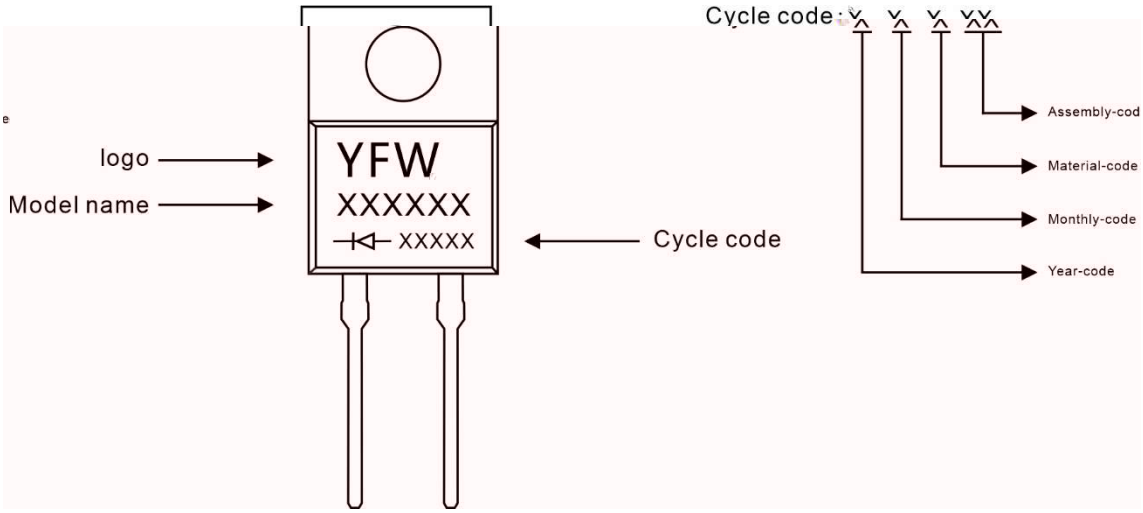

Ordering information

Model name	Package	Unit Weight	Base Quantity	Packing Quantity
	TO-220AC	0.067oz(1.9g)	50pcs/tube	1000PCS/Box 5000PCS/Carton

Package Dimensions

TO-220AC

