

TO-220AC

FIG. 1- DERATING CURVE OUTPUT RECTIFIED CURRENT

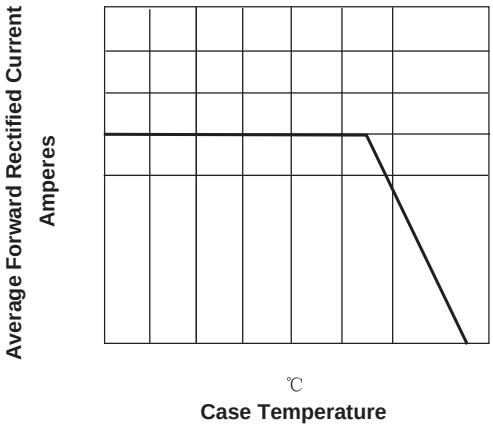

FIG. 2-MAXIMUM NON-REPETITIVE PEAK FORWARD SURGE CURRENT PERLEG

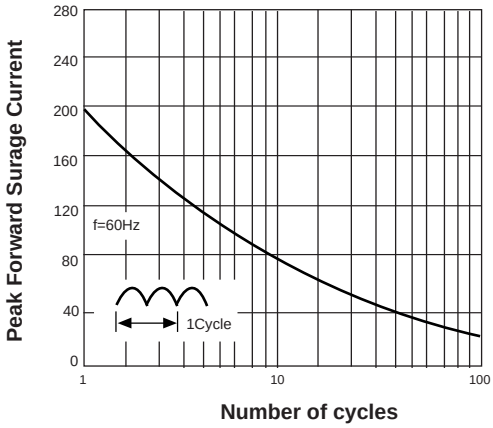

FIG. 3-TYPICAL FORWARD VOLTAGE CHARACTERISTICS

FIG. 4-TYPICAL REVERSE LEAKAGE CHARACTERISTICS

0 20 40 60 80 100

r

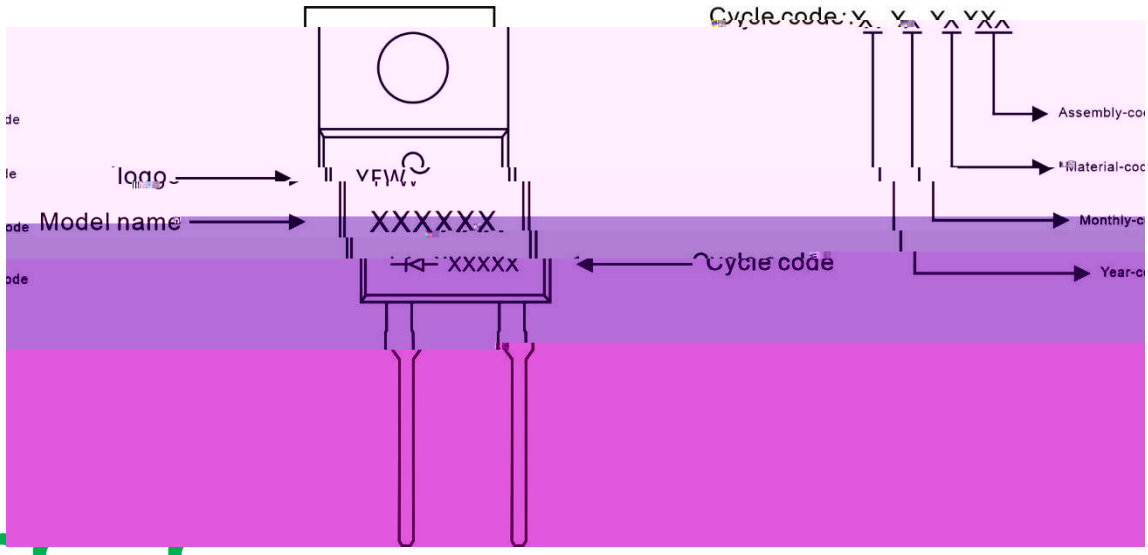

r r r

r		r	r	r r

r r

