MB34S THRU MB320S MBS

3A SURFACE MOUNT SCHOTTKY BRIDGE

RECTIFIER Reverse Voltage - 40 to 200 V

Forward Current - 3A

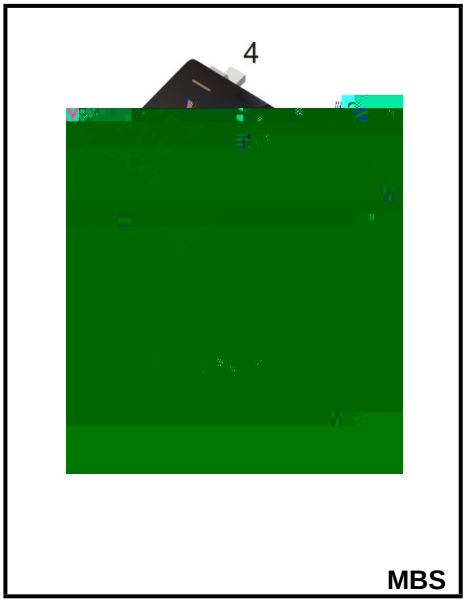

FEATURES

- High current capability
- Low forward voltage drop
- Low power loss, high efficiency
- Lead free in comply with EU RoHS 2011/65/EU directives

MECHANICAL DATA

- Case: MBS
- Terminals: Solderable per MIL-STD-750, Method 2026
- Approx. Weight: 100mg /0.0035oz

Maximum Ratings and Electrical characteristics

Ratings at 25 °C ambient temperature unless otherwise specified.

Single phase half-wave 60 Hz, resistive or inductive load, for capacitive load current derate by 20 %.

Parameter	Symbols	MB34S	MB36S	MB38S	MB310S	MB320S	Units
Maximum Repetitive Peak Reverse Voltage	V_{RRM}	40	60	80	100	200	V
Maximum RMS voltage	V_{RMS}	28	42	56	70	140	V
Maximum DC Blocking Voltage	V_{DC}	40	60	80	100	200	V
Average Rectified Output Current	$I_{F(AV)}$			3			A
Peak Forward Surge Current 8.3 ms Single Half Sine-Wave Superimposed on Rated Load(JEDEC method)	I_{FSM}		80		70		A
Max Instantaneous Forward Voltage at 3 A	V_F	0.55	0.70	0.85		0.95	V
Maximum DC Reverse Current @T_A=25°C	I_R	0.5		0.3			
at Rated DC Blocking Voltage @T_A=100°C		10		5			
Typical Junction Capacitance Note1	C_j	250		160			pF
Typical Thermal Resistance Note2	$R_{\theta JA}$			60			

Voltage Ç3 60 °C

Voltage 3Ð"0 60

Fig.2 Typical Reverse Characteristics

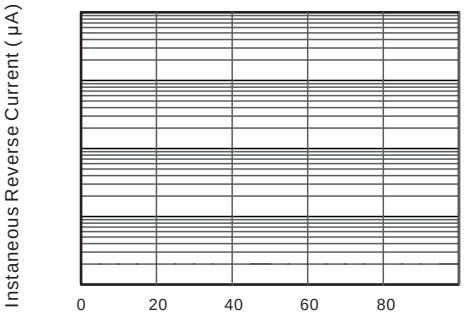

Marking Diagram

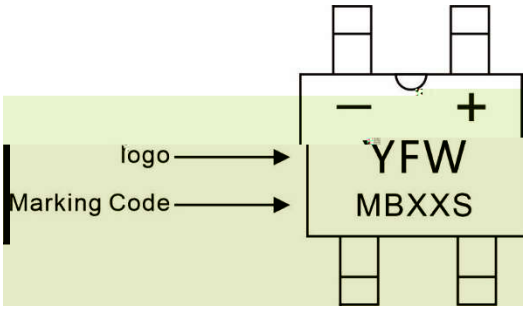

Ordering information

Package	Packing Description	Packing Quantity
MBS		

Package Dimensions

MBS

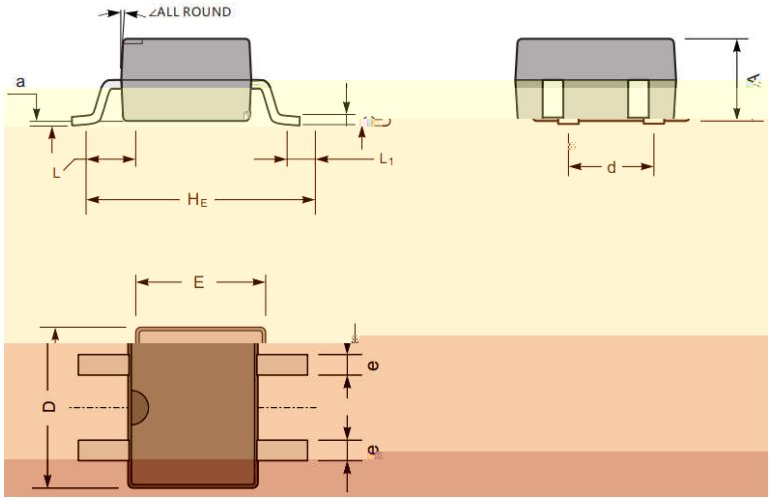

Dim.	Millimeter(mm)		(mil)	
	Min.	Max.	Min.	Max.
∠				

The recommended mounting pad size

