MB34S THRU MB320S MBS

3A SURFACE MOUNT SCHOTTKY BRIDGE

RECTIFIER Reverse Voltage - 40 to 200 V

Forward Current - 3A

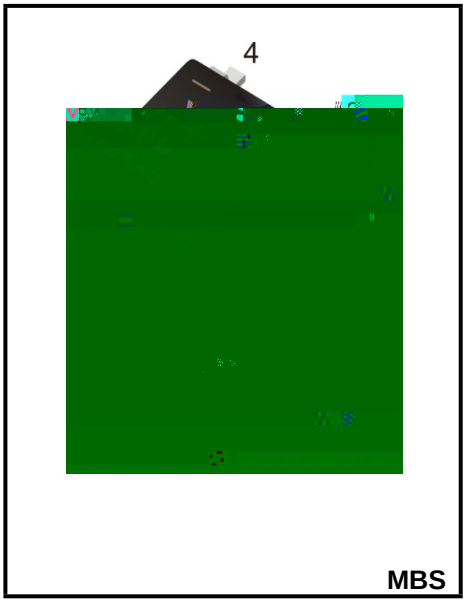

FEATURES

MECHANICAL DATA

Maximum Ratings and Electrical characteristics

Parameter	Symbols	MB34S	MB36S	MB38S	MB310S	MB320S	Units
	V_{RRM}						V
	V_{RMS}						V
	V_{DC}						V
	$I_{F(AV)}$						A
	I_{FSM}						A
	V_F						V
	I_R						
Note1	C_j						pF
Note2	$R_{\theta JA}$						

Ç3

3Ð"0

Fig.2 Typical Reverse Characteristics

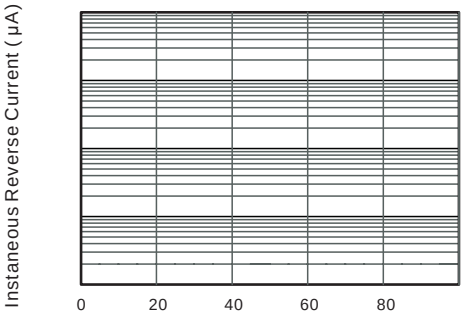

Marking Diagram

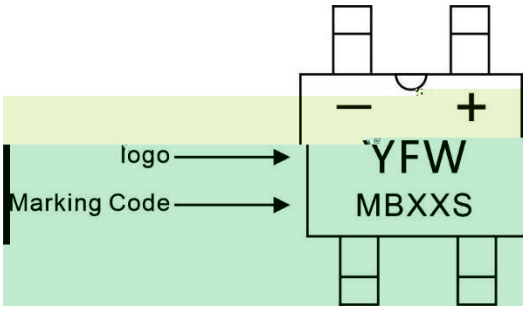

Ordering information

Package	Packing Description	Packing Quantity
MBS	Tape/Reel,13”reel	3000PCS/Reel 30000PCS/Carton

Package Dimensions

MBS

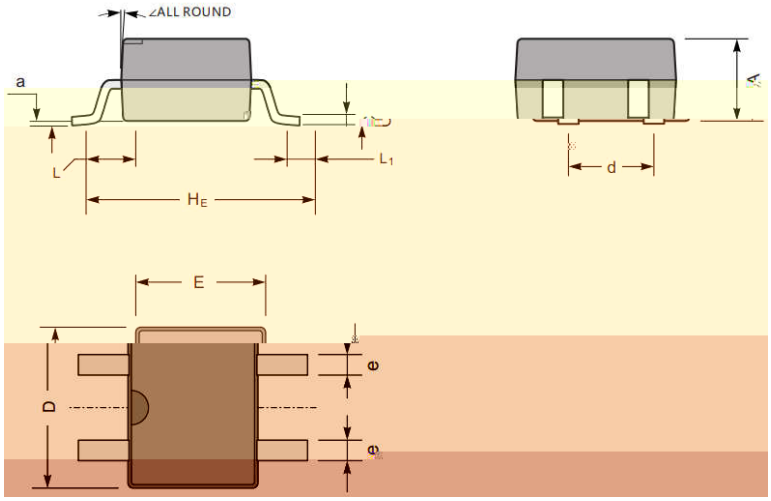

Dim.	Millimeter(mm)		(mil)	
	Min.	Max.	Min.	Max.
A	2.2	2.6	94	102
C	0.15	0.22	5.9	8.7
D	4.5	5.0	177	197
E	3.6	4.1	142	161
HE	6.4	7.0	252	276
d	2.3	2.7	91	106
e	0.5	0.7	20	28
L	1.3	1.7	51	67
L1	0.5	1.1	20	43
a	/	0.2	/	8
∠	7°			

The recommended mounting pad size

