1A SURFACE MOUNT SCHOTTKY BRIDGE

RECTIFIER Reverse Voltage - 40 to 200 V

Forward Current - 1A



MBS

FEATURES

High current capability
Low forward voltage drop
Low power loss, high efficiency
Lead free in comply with EU RoHS 2011/65/EU directives

MECHANICAL DATA

Case: MBS
Terminals: Solderable per MIL-STD-750, Method 2026
Approx. Weight: 100mg / 0.0035oz

Maximum Ratings and Electrical characteristics

Ratings at 25 °C ambient temperature unless otherwise specified.

Single phase half-wave 60 Hz, resistive or inductive load, for capacitive load current derate by 20 %.

Parameter	Symbols	MB14S	MB16S	MB18S	MB110S	MB115S	MB120S	Units
Maximum Repetitive Peak Reverse Voltage	V_{RRM}	40	60	80	100	150	200	V
Maximum RMS voltage	V_{RMS}	28	42	56	70	105	140	V
Maximum DC Blocking Voltage	V_{DC}	40	60	80	100	150	200	V
Average Rectified Output Current	$I_{F(AV)}$	1.0						A
Peak Forward Surge Current 8.3 ms Single Half Sine-Wave Superimposed on Rated Load(JEDEC method)	I_{FSM}	40			30			A
Max Instantaneous Forward Voltage at 1 A	V_F	0.55	0.70	0.85		0.90		V
Maximum DC Reverse Current @ 0 4 at Rated DC Blocking Voltage		3a1Md rs eV ¬		M	0	a	M ¬	

50

Fig.1 Forward Current Derating Curve

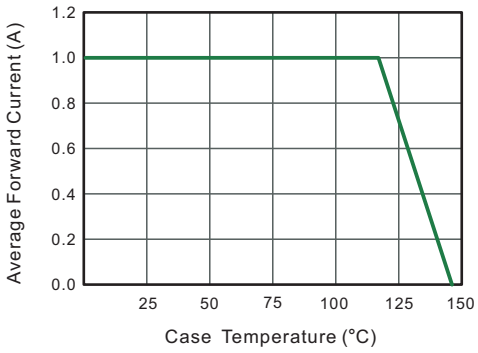

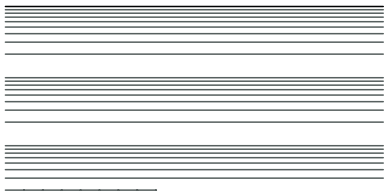

Fig.6- Typical Transient Thermal Impedance

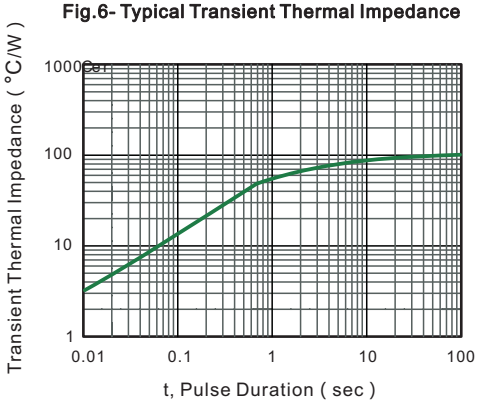

Marking Diagram

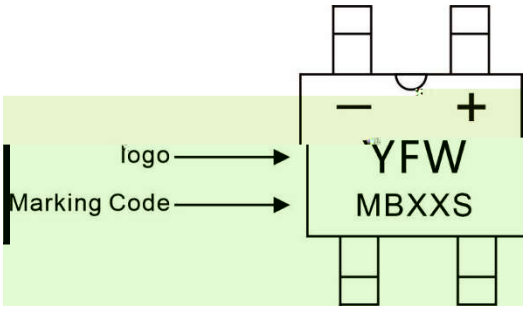

Ordering information

Package	Packing Description	Packing Quantity
MBS	Tape/Reel,13”reel	3000PCS/Reel 30000PCS/Carton

Package Dimensions

MBS

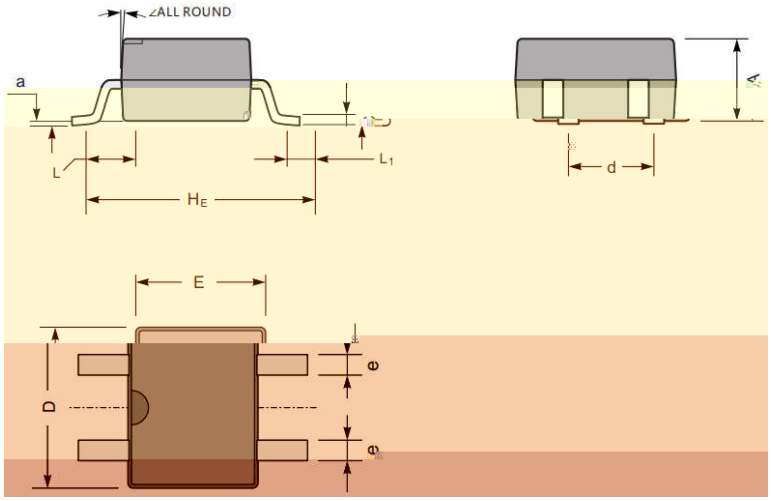

Dim.	Millimeter(mm)		(mil)	
	Min.	Max.	Min.	Max.
A	2.2	2.6	94	102
C	0.15	0.22	5.9	8.7
D	4.5	5.0	177	197
E	3.6	4.1	142	161
HE	6.4	7.0	252	276
d	2.3	2.7	91	106
e	0.5	0.7	20	28
L	1.3	1.7	51	67
L1	0.5	1.1	20	43
a	/	0.2	/	8
∠	7°			

The recommended mounting pad size

